# CATALOGUS MET RESERVEONDERDELEN

# : HUSQVARNA 522IHD75

KEES VAN DER SPEK
TUINMACHINES ★ STOLWIJK

Lijst van reserve-onderdelen

# LIJST VAN RESERVE-ONDERDELEN

KEES VAN DER SPEK
OLDTIMER SERVICE

## C 522iHD75 GEAR

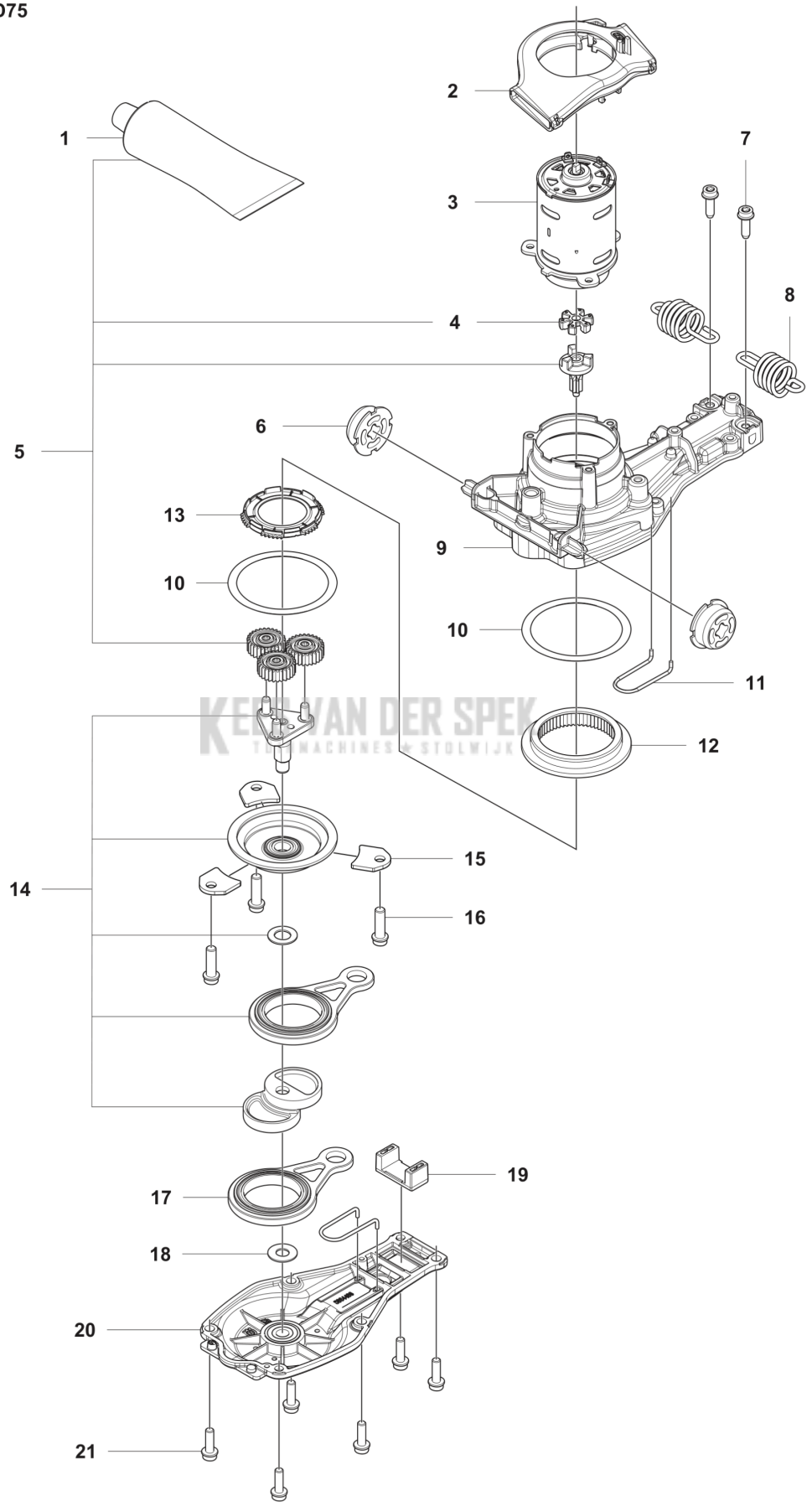


KEES VAN DER SPEK
TUINMACHINES STOLWIJK

| REF. | | OMSCHRIJVING | OPMERKING | | KIT |
|---|---|---|---|---|---|
| 1 | 503989603 | VET | | 1 | |
| 2 | 534204501 | LUCHTLEIDING | | 1 | |
| 3 | 599935801 | MOTOR | | 1 | |
| 4 | 535605401 | DEMPER | | 1 | |
| 5 | 536628801 | TANDWIELSET | | 1 | |
| 6 | 599723201 | AV ELEMENT | | 1 | |
| 7 | 573925801 | SCREW ITXSCFT | | 2 | |
| 8 | 536049501 | VEER | | 2 | |
| 9 | 531224001 | VERSNELLINGSBAK COMPL. | | 1 | |
| 10 | 529648501 | SCHUIFBARE RING | | 2 | |
| 11 | 598870101 | SLIJTBESCHERMING | | 2 | |
| 12 | 597786401 | TANDWIEL | | 1 | |
| 13 | 535604601 | GLIJ PLAAT | | 1 | |
| 14 | 531195701 | LAGERRING | | 1 | |
| 15 | 529759101 | VEERPLAAT | | 3 | |
| 16 | 525825101 | SCHROEF ITXSCM | | 3 | |
| 17 | 531195601 | DRIJFSTANG COMPL. | | 1 | |
| 18 | 531097101 | RING | | 1 | |
| 19 | 590537101 | AFDICHTING | | 1 | |
| 20 | 531195301 | COVER ASSY | | 1 | |
| 21 | 525755101 | SCHROEF ITXSCFM | | 6 | |

KEES VAN DER SPEK
TUINMACHINES ★ STOLWIJK

# D 522iHD75 HANDLE

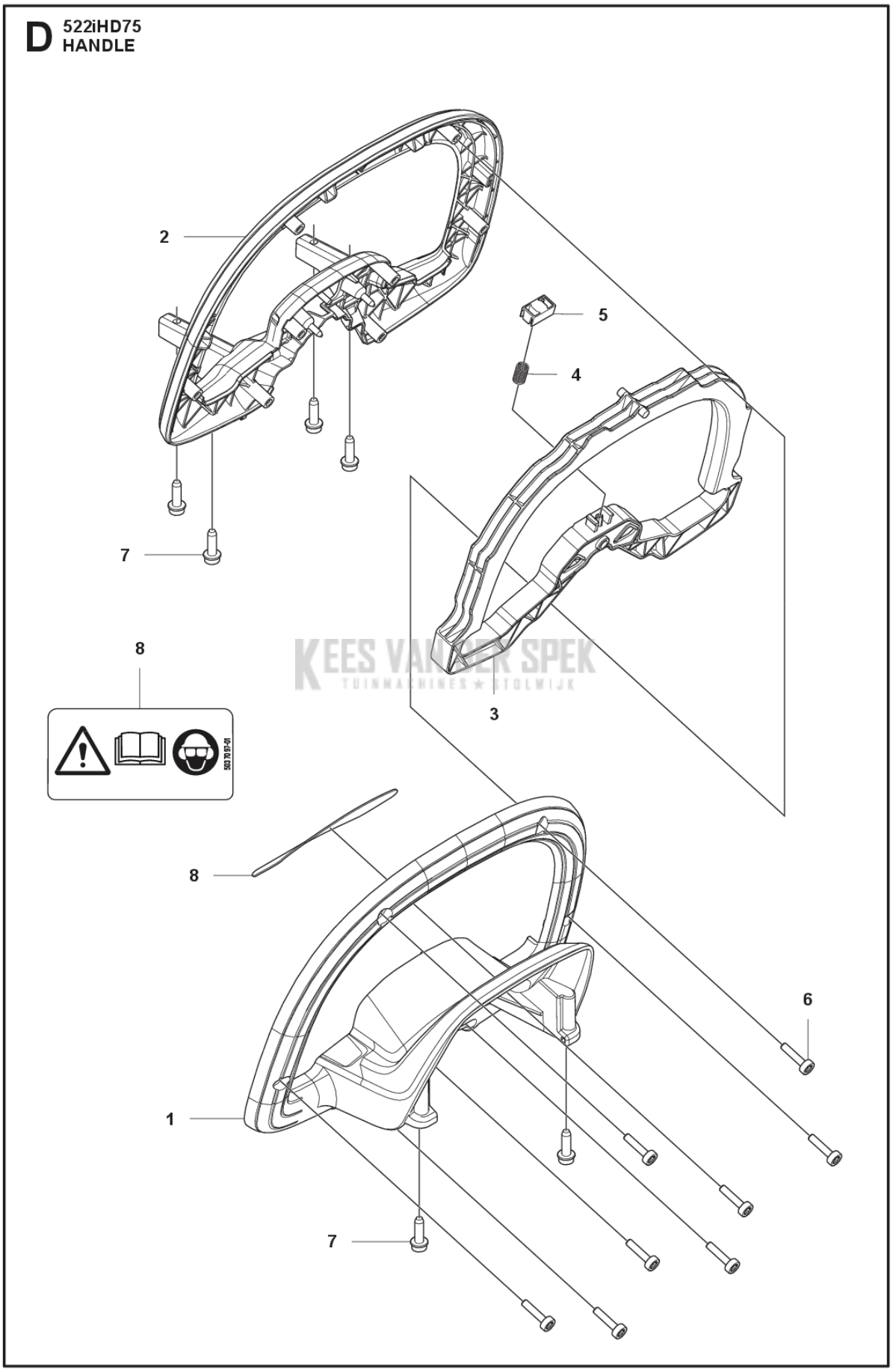


KEES VANDER SPEK
TUINMACHINES ★ STOLWIJK

| REF. | | OMSCHRIJVING | OPMERKING | | KIT |
|---|---|---|---|---|---|
| 1 | 598460601 | VOORSTE BEUGEL | | 1 | |
| 2 | 598460701 | VOORSTE BEUGEL | | 1 | |
| 3 | 598460801 | VOORSTE BEUGEL | | 1 | |
| 4 | 536618901 | DRUKVEER | | 1 | |
| 5 | 536619001 | BUSHING | | 1 | |
| 6 | 580292901 | SCREW ITXSCT | | 8 | |
| 7 | 573925801 | SCREW ITXSCFT | | 6 | |
| 8 | 503709701 | PLAATJE | | 1 | |

KEES VAN DER SPEK
TUINMACHINES ★ STOLWIJK

# A 522iHD75 ELECTRICAL

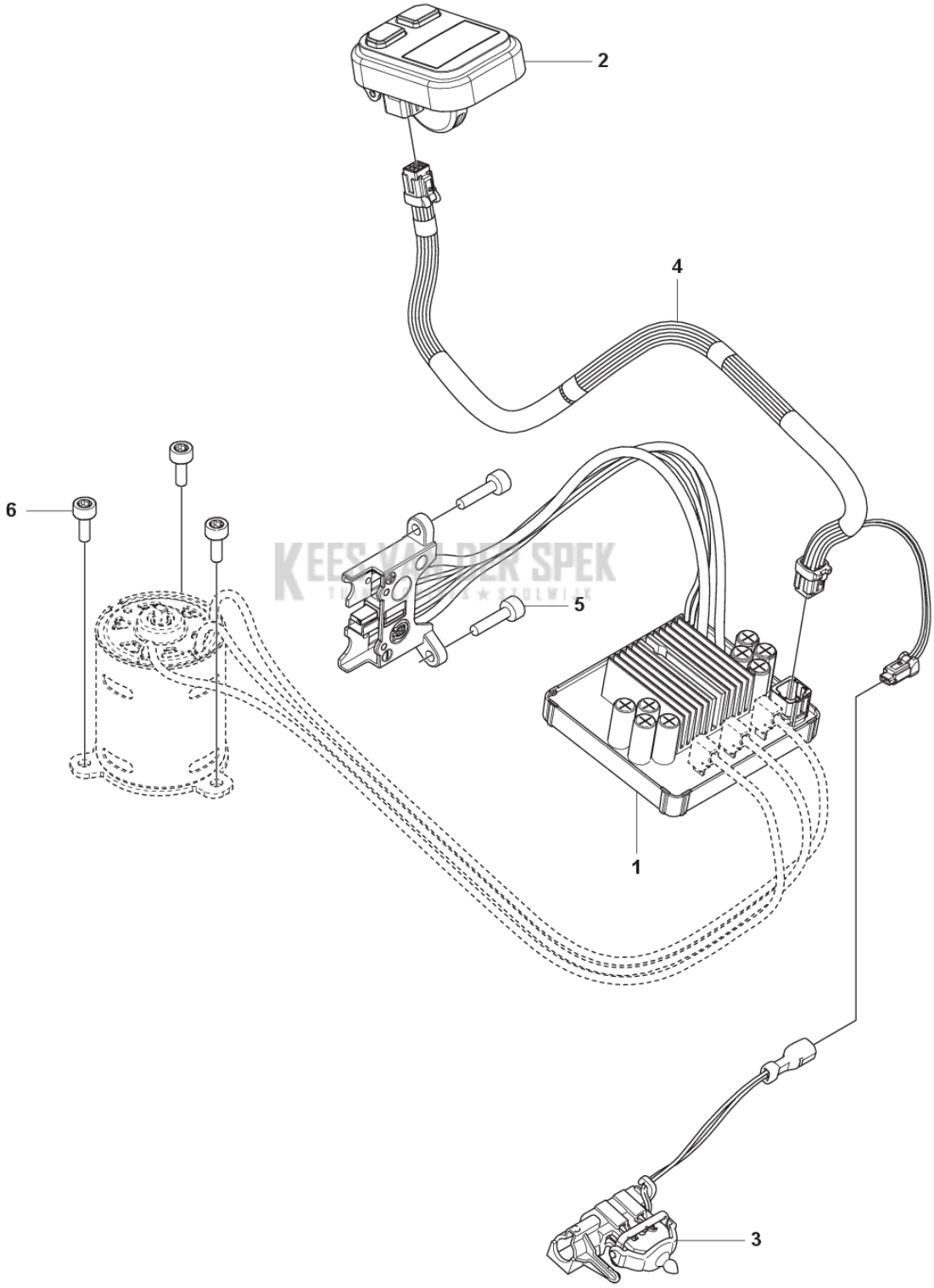


KEES VAN DER SPEK

| REF. | | OMSCHRIJVING | OPMERKING | | KIT |
|---|---|---|---|---|---|
| 1 | 536775501 | BESTURINGSEENHEID | | 1 | |
| 2 | 599314401 | CONTROLE PANEEL | with Bluetooth | 1 | |
| 2 | 599314501 | CONTROLE PANEEL | without Bluetooth | 1 | |
| 3 | 531337702 | MICRO SCHAKELAAR | | 1 | |
| 4 | 598490101 | BEKABELING COMPL. | | 1 | |
| 5 | 580292901 | SCREW ITXSCT | | 2 | |
| 6 | 574353505 | SCHROEF ITXSCM | | 3 | |

KEES VAN DER SPEK
TUINMACHINES ★ STOLWIJK

## B 522iHD75
## CUTTING EQUIPMENT

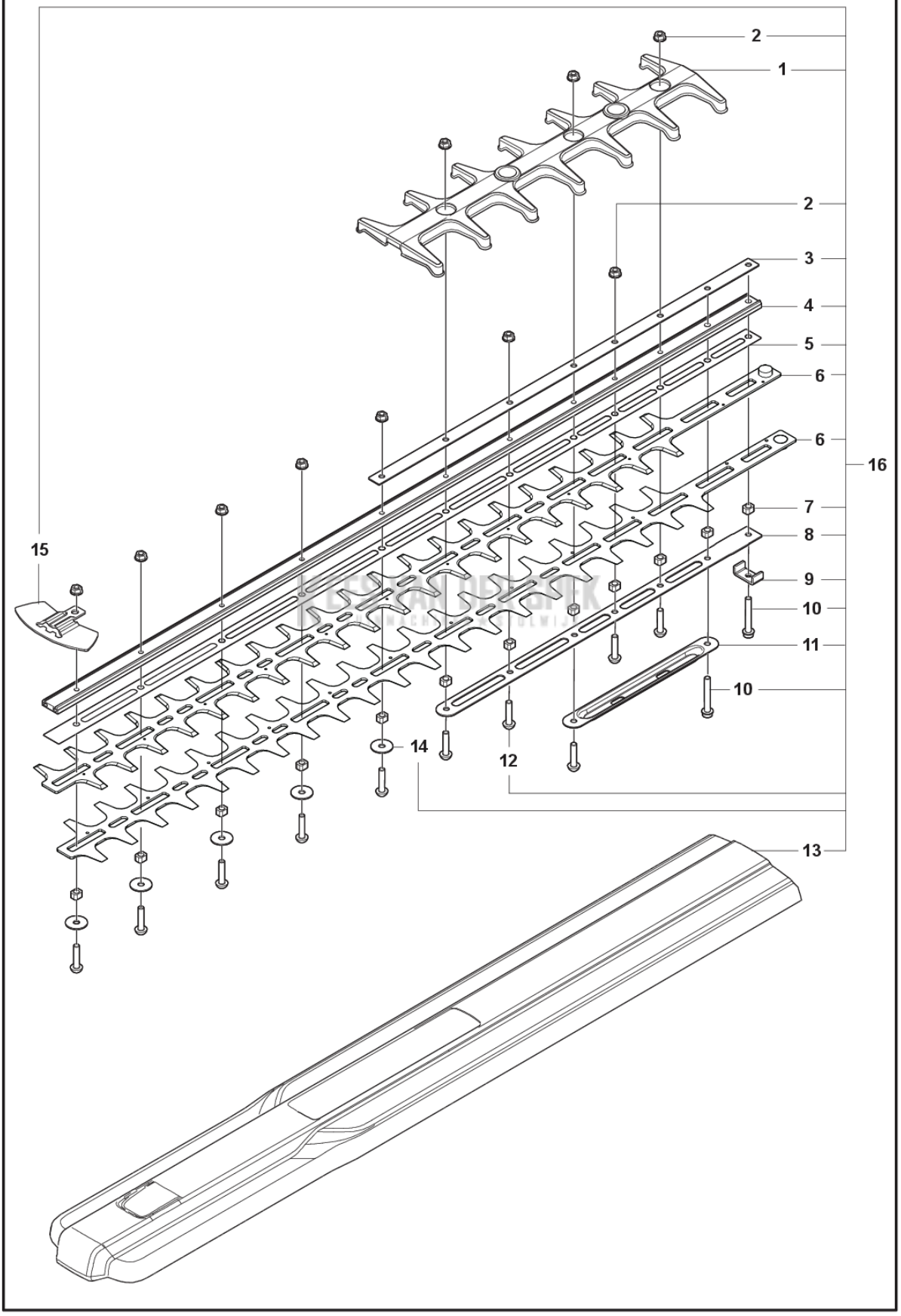

| REF. | | OMSCHRIJVING | OPMERKING | | KIT |
|---|---|---|---|---|---|
| 1 | 590645701 | BESCHERMSTANG | | 1 | |
| 2 | 592751301 | MOER | | 10 | |
| 3 | 592848701 | ZAAGBLADPLAAT | | 1 | |
| 4 | 590327102 | ZAAGBLAD | | 1 | |
| 5 | 590327601 | SLIJTPLAAT | | 1 | |
| 6 | 597686601 | MES | | 2 | |
| 7 | 597661501 | AFSTANDRING | | 12 | |
| 8 | 590328301 | ZAAGBLADPLAAT | | 1 | |
| 9 | 590339301 | BEVESTIGING | | 1 | |
| 10 | 525755103 | SCHROEF ITXSCFM | | 2 | |
| 11 | 592889401 | ZAAGBLADPLAAT | | 1 | |
| 12 | 592732501 | SCREW | | 10 | |
| 13 | 590651406 | TRANSPORTBESCHERMING | | 1 | |
| 14 | 592738101 | RING | | 5 | |
| 15 | 590712601 | BESCHERMING | | 1 | |
| 16 | 597739901 | MAAISYSTEEM | | 1 | |

KEES VAN DER SPEK
TUINMACHINES ★ STOLWIJK

# E 522iHD75 HOUSING

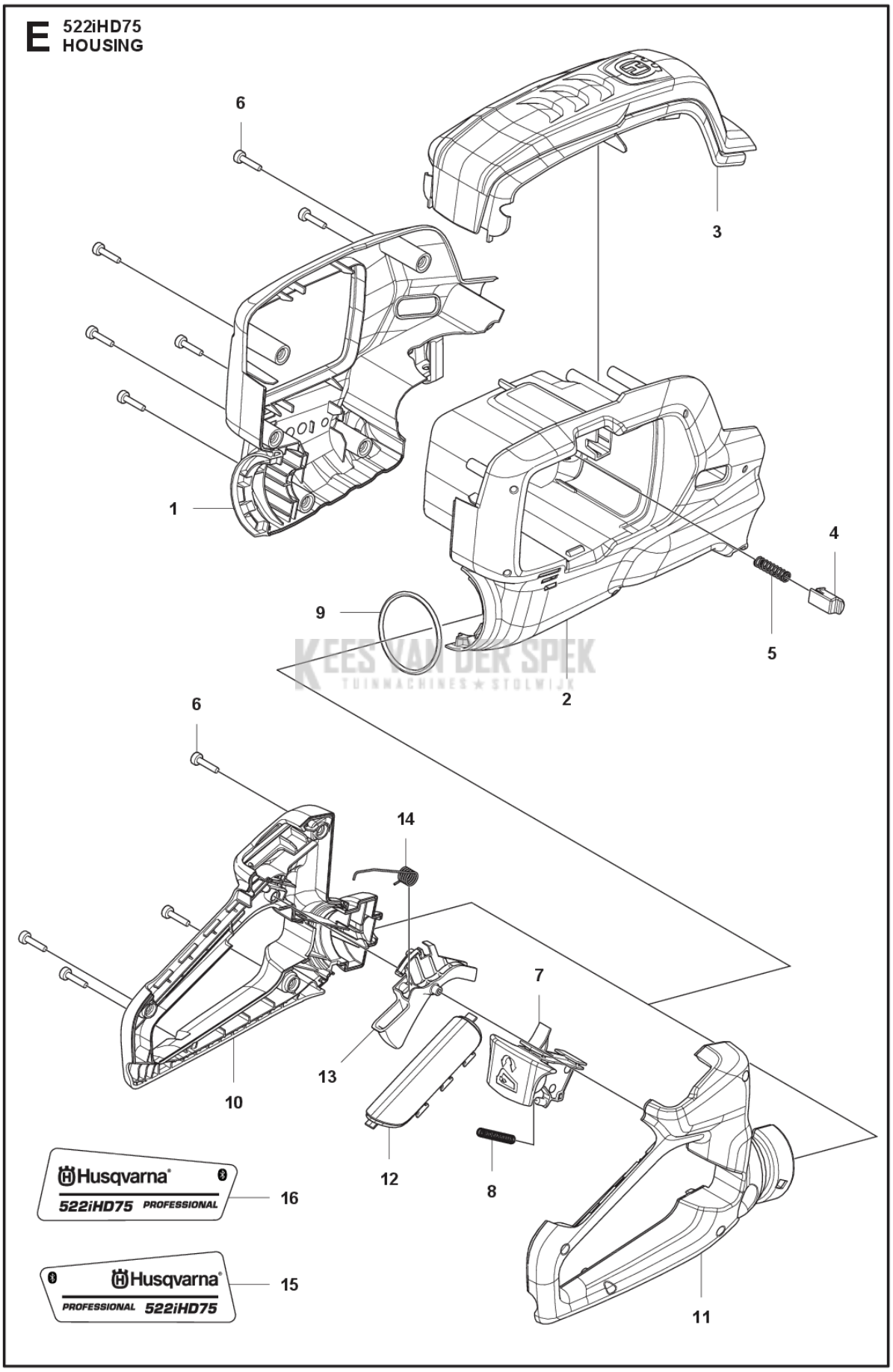


KEES VAN DER SPEK
TUINMACHINES ★ STOLWIJK

| REF. | | OMSCHRIJVING | OPMERKING | | KIT |
|---|---|---|---|---|---|
| 1 | 598369801 | HUIS | Left | 1 | |
| 2 | 598369901 | HUIS | Right | 1 | |
| 3 | 598370001 | DEKSEL | | 1 | |
| 4 | 577996601 | DRUKKNOP | | 1 | |
| 5 | 585480001 | VEER | | 1 | |
| 6 | 580292901 | SCREW ITXSCT | | 10 | |
| 7 | 598529901 | BORGKNOP | | 1 | |
| 8 | 584270001 | RETOURVEER | | 1 | |
| 9 | 535328701 | O-RING | | 1 | |
| 10 | 598483801 | ACHTER HANDGREEP | | 1 | |
| 11 | 598483701 | ACHTER HANDGREEP | | 1 | |
| 12 | 598637901 | FRAME | | 1 | |
| 13 | 536336401 | THROTTLE TRIGGER | | 1 | |
| 14 | 531363801 | VEER | | 1 | |
| 15 | 536291305 | STICKER | Left without Bluetooth | 1 | |
| 15 | 536291302 | STICKER | Left with Bluetooth | 1 | |
| 16 | 536291405 | STICKER | Right without Bluetooth | 1 | |
| 16 | 536291402 | STICKER | Right with Bluetooth | 1 | |

KEES VAN DER SPEK
TUINMACHINES ★ STOLWIJK

# F 522iHD75 ACCESSORIES

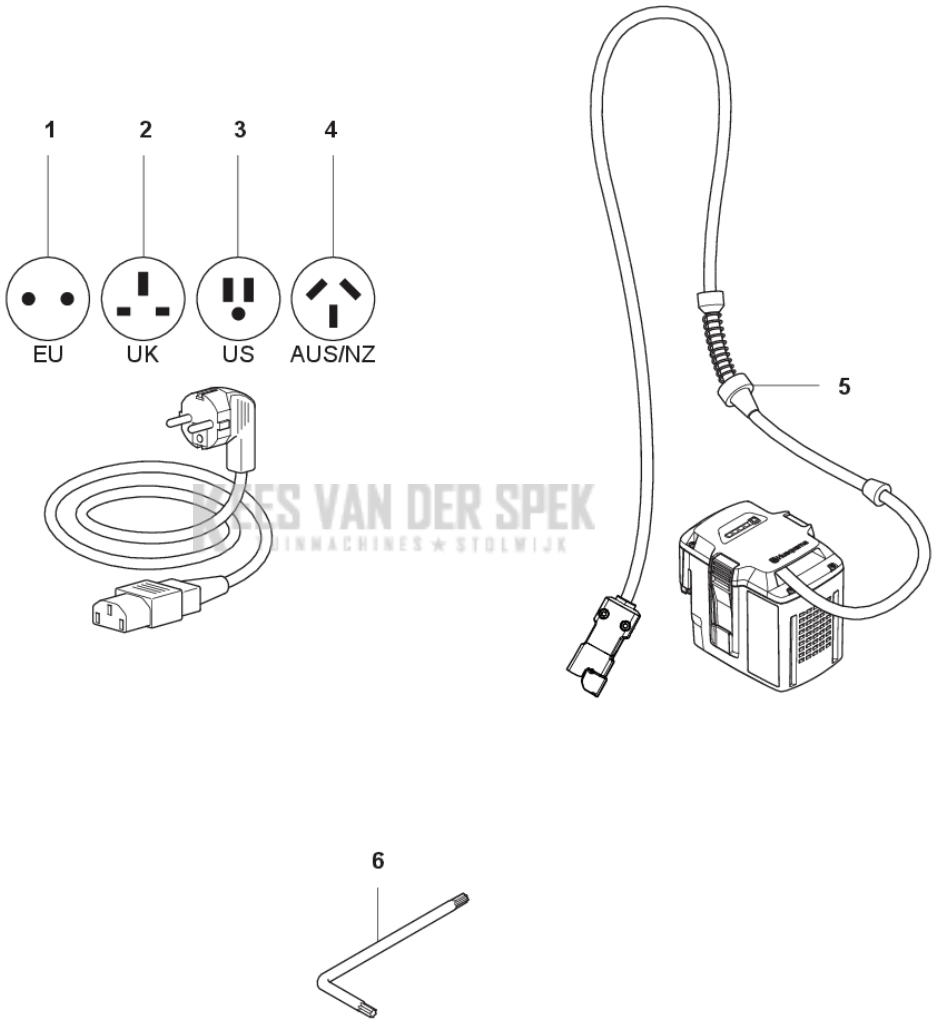


BOES VAN DER SPEK
TUINMACHINES ★ STOLWIJK

| REF. | | OMSCHRIJVING | OPMERKING | | KIT |
|---|---|---|---|---|---|
| 1 | 578081901 | HOOFDKABEL | EU | 1 | |
| 2 | 579130601 | HOOFDKABEL | UK | 1 | |
| 3 | 579130401 | KABEL | US | 1 | |
| 4 | 581295001 | HOOFDKABEL | AU / NZ | 1 | |
| 5 | 598828801 | BATTERY ADAPTER | | 1 | |
| 6 | 576426402 | SLEUTEL | | 1 | |

KEES VAN DER SPEK
TUINMACHINES ★ STOLWIJK