McCULLOCH

SPARE PARTS LIST

CHAIN SAWS

KEES VAN DER SPEK

CS42S, 2016-05

N Accessories
Zubehöre
Acceccoires
Acessorios
Tillbehör

KEES VAN DER SPEK
TUINMACHINES ★ STOLWIJK

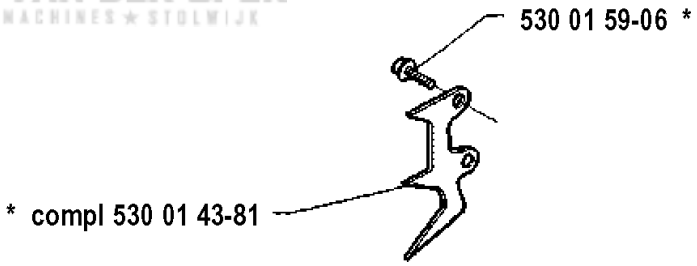

Part No	Description	Remark	QTY KIT
530 01 43-81	FELLING DOG		1
530 01 59-06	SCREW		1

KEES VAN DER SPEK
TUINMACHINES ★ STOLWIJK

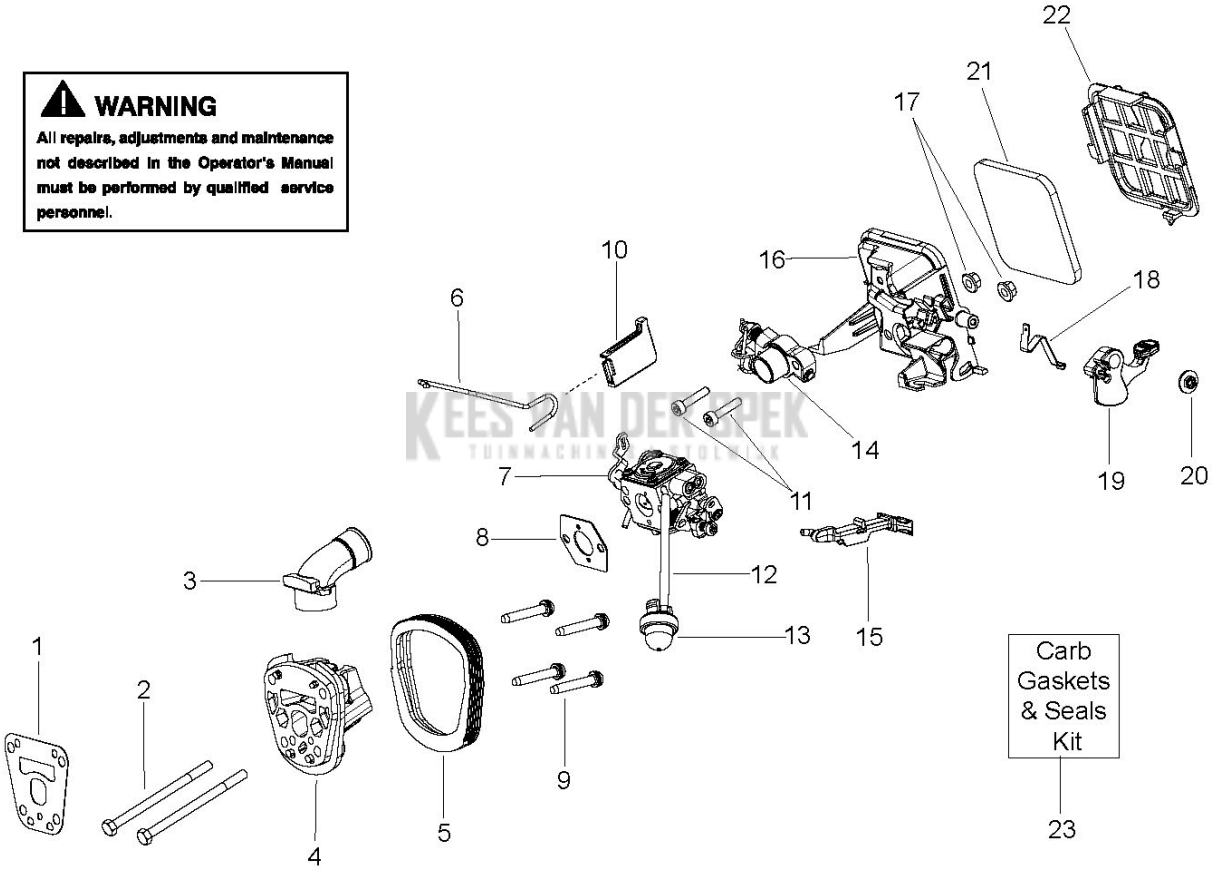
WARNING
All repairs, adjustments and maintenance not described in the Operator's Manual must be performed by qualified service personnel.
1
2
3
4
5
6
7
8
9
10
11
12
13
14
15
16
17
18
19
20
21
22
Carb Gaskets & Seals Kit
23

Ref	Part No	Description	Remark	QTY	KIT
1	585 30 91-01	GASKET	CYLINDER GASKET	1	
2	587 36 04-01	SCREW	CARB STUD	2	
3	585 31 73-01	BOOT	CARB BOOT INTAKE	1	
4	585 30 89-01	ADAPTER	CARB ADAPTOR	1	
5	585 31 74-01	SEAL	CARB ADAPTOR SEAL	1	
6	585 05 89-01	WIRE	THROTTLE WIRE	1	
7	596 78 66-02	SERVICE KIT	CARBURETOR	1	7,8,12,13,14
8	585 69 51-01	GASKET	CARB GASKET	1	
9	587 12 74-01	SCREW	CARB ADAPTER TO CYLINDER SCREW	4	
10	585 43 61-01	CAP	THROTTLE WIRE CAP	1	
11	545 00 35-11	SCREW	AIR VALVE TO FILTER SCREW	2	
12	580 72 71-02	FUEL HOSE	FUEL LINE KIT	1	
13	586 68 83-01	PURGE BULB	PURGE BULB	1	
14	596 78 66-02	SERVICE KIT	CARBURETOR	1	7,8,12,13,14
15	585 31 56-01	LEVER	CHOKE LEVER	1	
16	585 31 54-01	HOUSING	AIR FILTER HOUSING	1	
17	530 01 61-01	NUT	CARB NUT	2	
18	530 05 79-08	SPRING	IGNITION SWITCH SPRING	1	
19	585 31 55-01	LEVER	IGNITION SWITCH LEVER	1	
20	530 01 60-80	SCREW	SWITCH SCREW	1	
21	585 31 57-01	FILTER	FILTER ELEMENT	1	
22	586 50 19-01	COVER	FILTER COVER	1	
23	587 45 59-03	KIT	CARB GASKETS AND SEALS	1	1,3,5,8

KEES VAN DER SPEK
TUINMACHINES ★ STOLWIJK

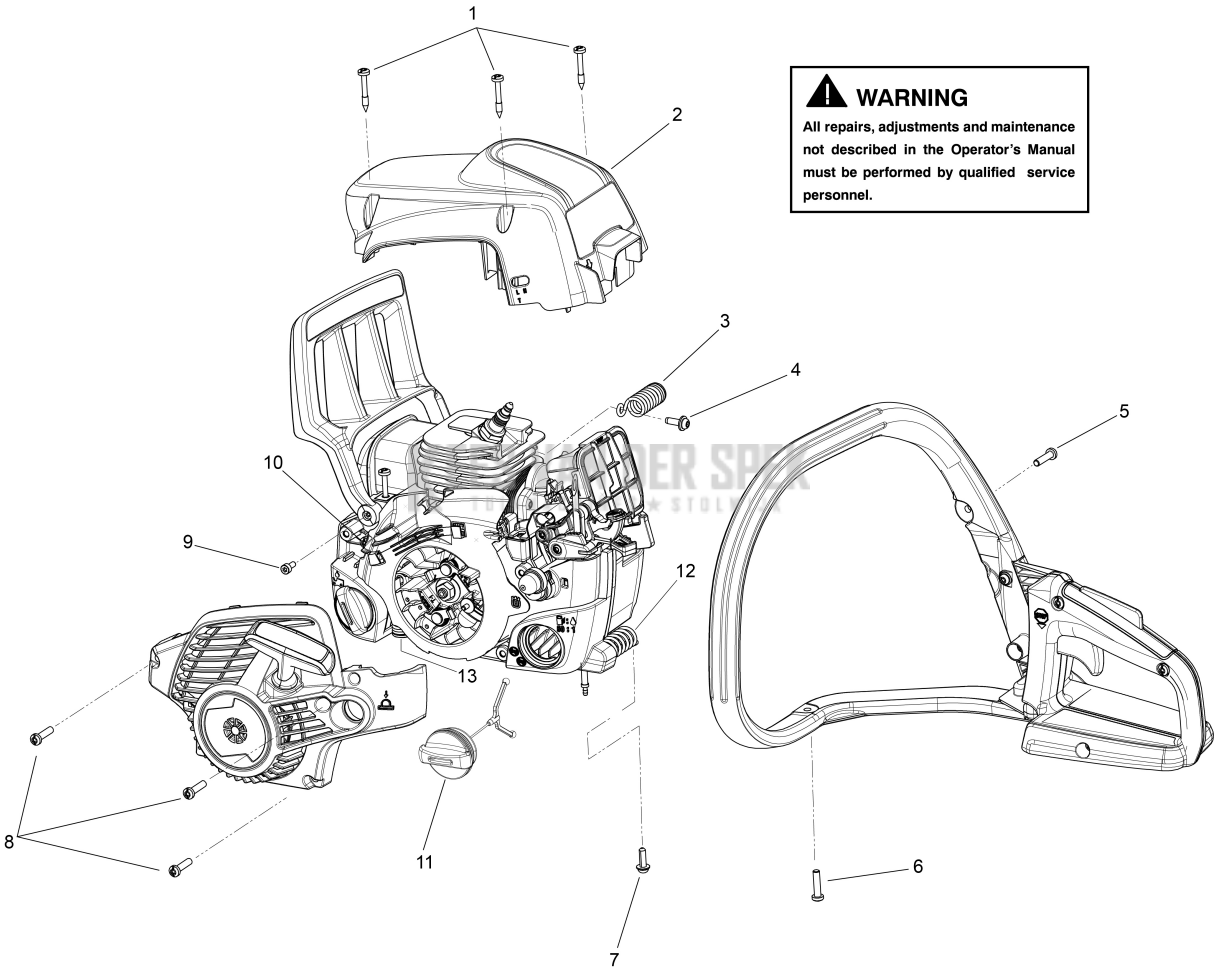

WARNING

All repairs, adjustments and maintenance not described in the Operator's Manual must be performed by qualified service personnel.

Ref	Part No	Description	Remark	QTY KIT
1	530 01 61-53	SCREW	CAPTIVE SCREW	3
2	586 56 14-01	SHIELD	CYLINDER SHIELD (MCC/PP), STD CHOKE CARB	1
3	585 43 63-01	SPRING	UPPER REAR ISOLATOR SPRING	1
4	530 01 64-43	SCREW	SCREW	1
5	530 01 64-32	SCREW	SCREW M5.38-14X22.225MM	2
6	530 01 64-32	SCREW	SCREW M5.38-14X22.225MM	2
7	530 01 59-06	SCREW	SCREW	2
8	530 01 64-32	SCREW	SCREW M5.38-14X22.225MM	3
9	588 27 46-01	SPRING	HANDGUARD SPRING	1
10	530 01 64-32	SCREW	SCREW M5.38-14X22.225MM	4
11	544 11 12-04	TANK CAP ASSY	TANK CAP ASSY	2
12	585 00 57-01	SPRING	LOWER REAR ISOLATOR SPRING	1
13	586 44 81-01	SPRING	FRONT ISOLATOR SPRING	1

KEES VAN DER SPEK
TUINMACHINES ★ STOLWIJK

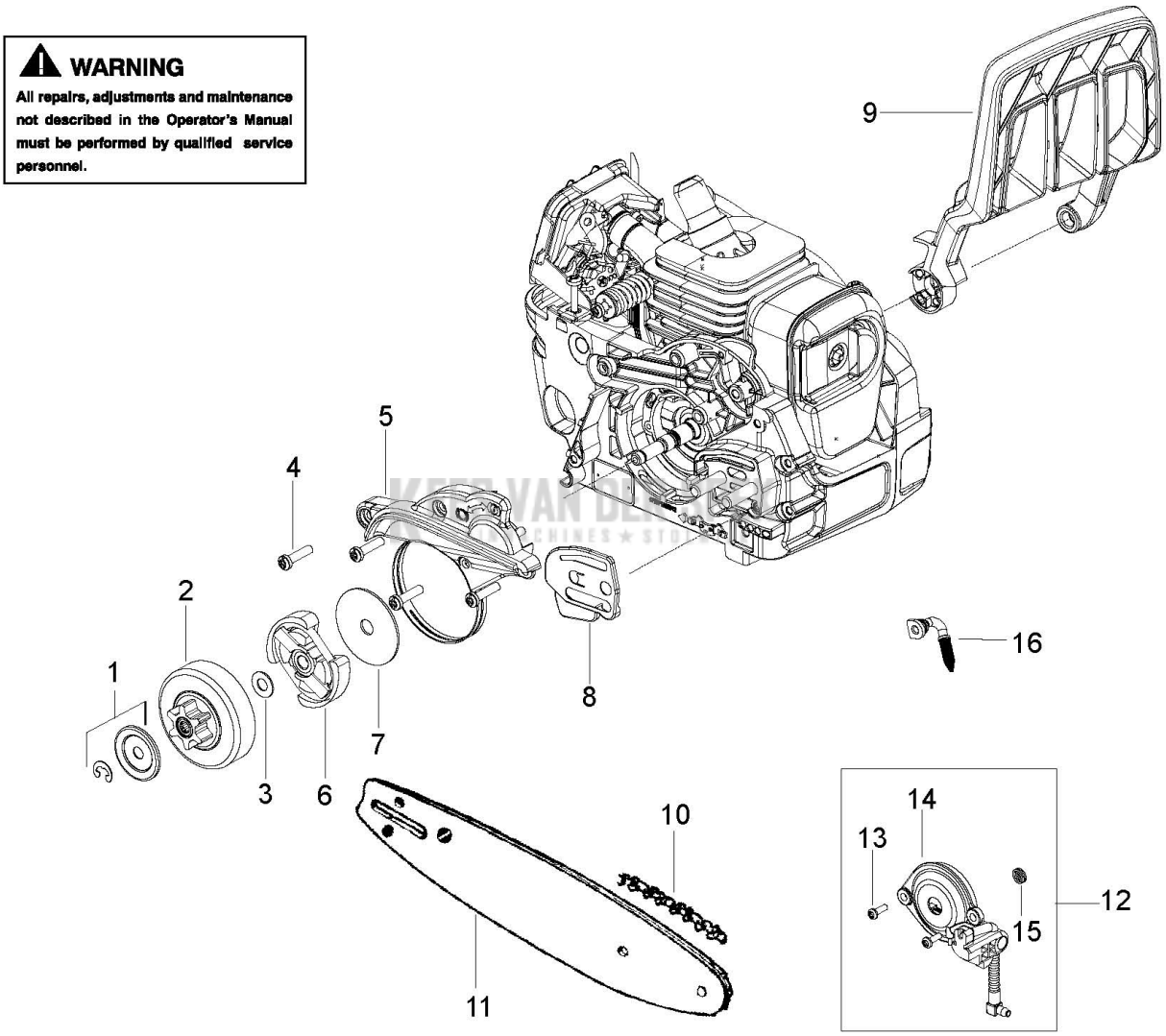
WARNING
All repairs, adjustments and maintenance not described in the Operator's Manual must be performed by qualified service personnel.
1
2
3
4
5
6
7
8
9
10
11
12
13
14
15
16

Ref	Part No	Description	Remark	QTY KIT
1	530 07 19-45	KIT	CLUTCH WASHER KIT (INCL. 3)	1
2	501 62 83-01	CLUTCH DRUM ASSY	CLUTCH DRUM ASSEMBLY	1
3	530 07 19-45	KIT	CLUTCH WASHER KIT (INCL. 1)	1
4	530 01 64-32	SCREW	SCREW	4
5	530 07 18-93	KIT	CHAIN BRAKE KIT	1
6	530 05 79-07	CLUTCH ASSY	CLUTCH ASSY	1
7	530 01 64-19	WASHER	LARGE CLUTCH WASHER	1
8	530 05 79-10	PLATE BAR MOUNTING	BAR MOUNTING PLATE	1
9	586 56 12-01	GUARD	HANDGUARD	1
10	579 57 93-01	CHAIN	"CHAIN 91PX 14"" 3/8"" 52DL (MCCULLOCH)"	1
11	582 28 01-01	BAR	"BAR, MCCULLOCH 14 IN (35 CM)"	1
12	530 07 18-91	KIT	OIL PUMP KIT	1
13	545 22 71-01	SCREW	SCREW	2
14	530 05 79-31	OIL PUMP ASSY	OIL PUMP ASSEMBLY	1
15	530 03 78-20	WORM GEAR	WORM GEAR	1
16	530 05 79-24	ASSEMBLY	OIL PICK-UP ASSEMBLY	1

KEES VAN DER SPEK
TUINMACHINES ★ STOLWIJK

WARNING

All repairs, adjustments and maintenance not described in the Operator's Manual must be performed by qualified service personnel.

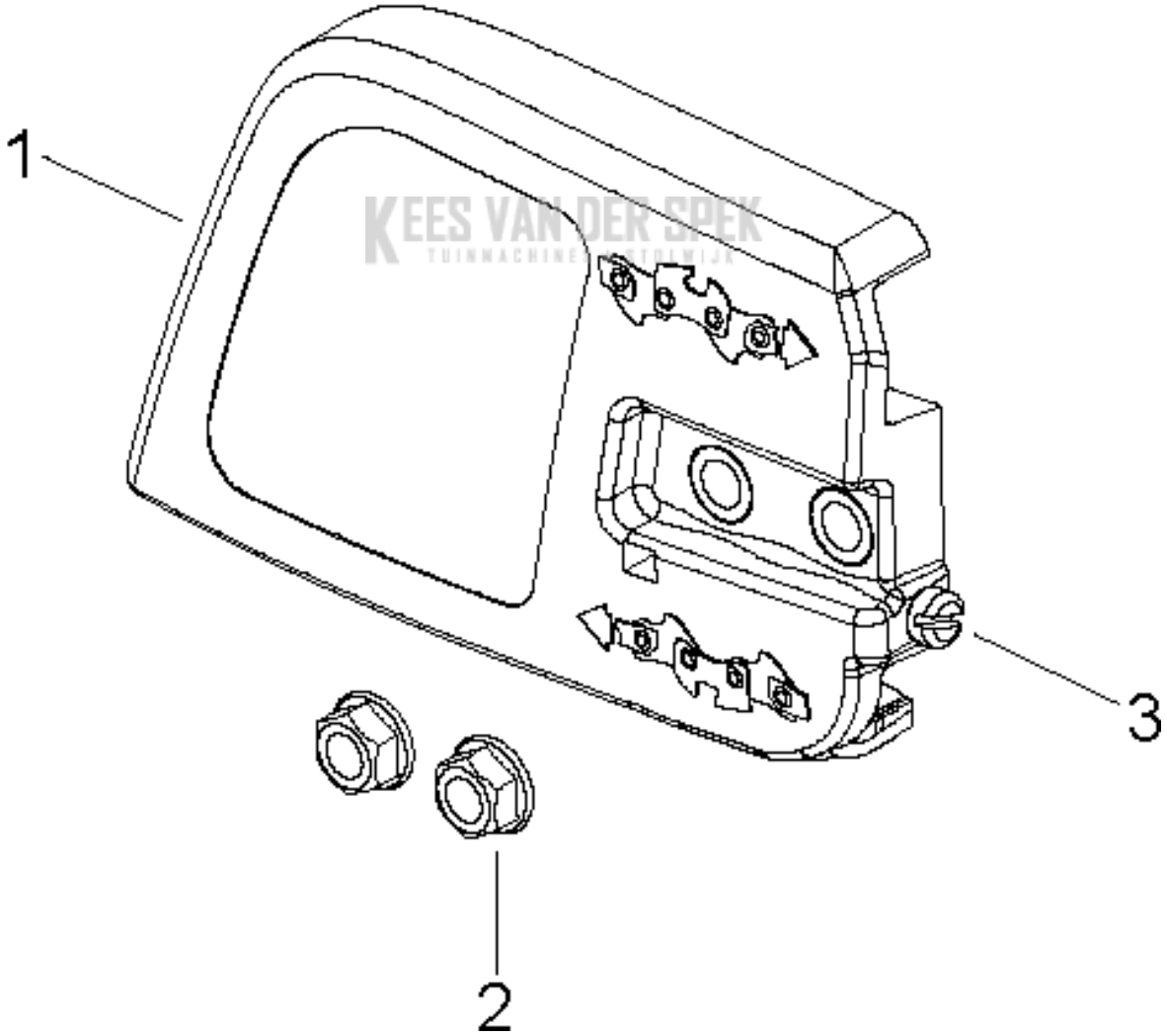

KEES VAN DER SPEK TUINMACHINES STOLWIJK

Ref	Part No	Description	Remark	QTY KIT
1	545 01 22-01	CLUTCH COVER ASSY	CLUTCH COVER ASSY BLACK (INCL. 3)	1
2	530 01 59-17	NUT	BAR NUT	2
3	530 06 96-11	RETAINER	FRONT ADJUST SCREW AND GEARS KIT	1

KEES VAN DER SPEK
TUINMACHINES ★ STOLWIJK

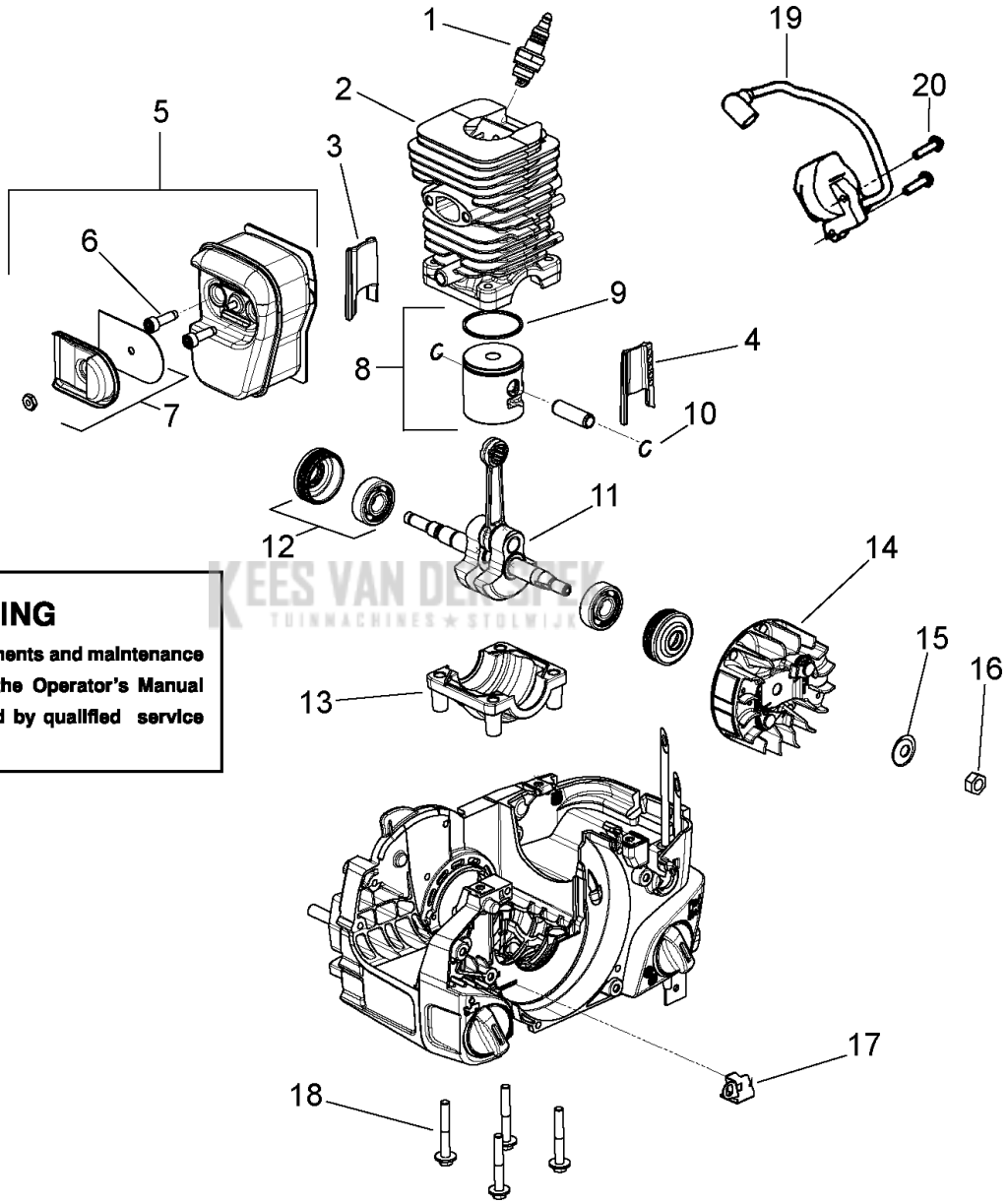

WARNING

All repairs, adjustments and maintenance not described in the Operator's Manual must be performed by qualified service personnel.

KEES VAN DEN BEK TUINMACHINES ★ STOLWIJK

Ref	Part No	Description	Remark	QTY KIT
1	585 35 82-01	SPARK PLUG	"SPARK PLUG BRISK M14x1,25 HQT-1"	1
2	530 07 18-84	KIT	"CYLINDER KIT (INCL. CYLINDER, 3, 4)"	1
3	545 01 54-01	INSERT	RIGHT INSERT (GRAY)	1
4	545 01 53-01	INSERT	LEFT INSERT (BLACK)	1
5	501 80 90-01	MUFFLER ASSY	MUFFLER ASSY	1
6	530 01 63-38	BOLT	MUFFLER BOLT	2
7	545 08 17-01	SPARK ARRESTER	SPARK ARRESTER ASSY	1
8	582 02 31-01	SERVICE KIT	"PISTON KIT (INCL. PISTON, PIN, 9, 10)"	1
9	545 16 04-01	PISTON RING	PISTON RING	1
10	530 01 56-97	LOCKING RING	PISTON PIN RETAINER	2
11	587 60 25-01	CRANKSHAFT	CRANKSHAFT & CON ROD ASSY	1
12	530 05 63-63	BEARING	CRANKSHAFT BEARING & SEAL ASSY	2
13	586 12 05-01	CRANKCASE	CRANKCASE CAP	1
14	545 01 63-08	FLYWHEEL ASSY	FLYWHEEL ASSY	1
15	530 01 51-27	WASHER	FLYWHEEL WASHER	1
16	530 01 61-34	NUT	FLYWHEEL NUT	1
17	585 36 56-01	STRAP	GROUND STRAP	1
18	545 08 15-01	BOLT	CYLINDER BOLT	4
19	583 94 49-03	MODULE	IGNITION MODULE	1
20	530 01 64-32	SCREW	SCREW M5.38-14X22.225MM	1

KEES VAN DER SPEK
TUINMACHINES ★ STOLWIJK

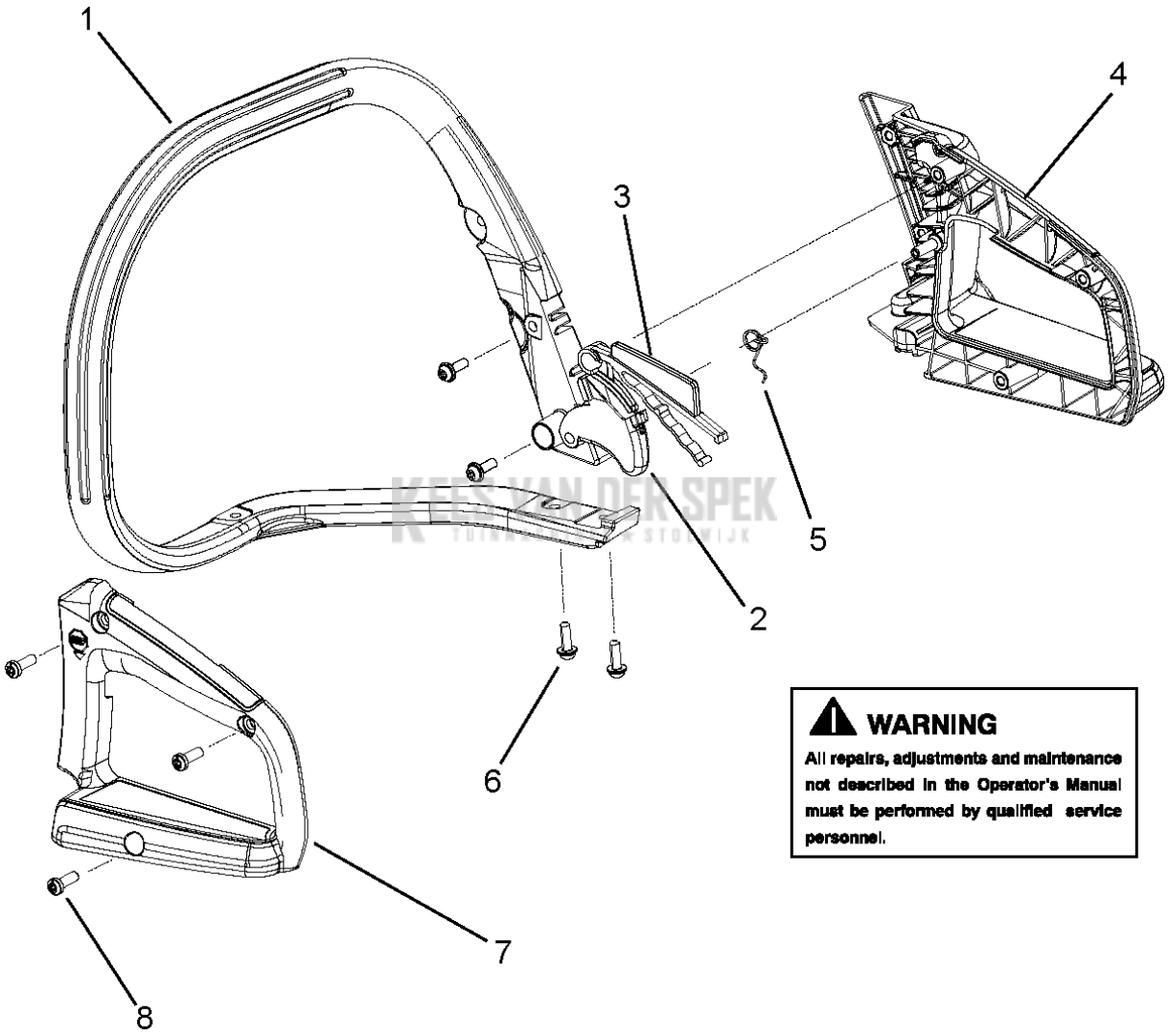

KEES VAN DER SPEK
TUINMACHINESTOMERIJK

WARNING

All repairs, adjustments and maintenance not described in the Operator's Manual must be performed by qualified service personnel.

Ref	Part No	Description	Remark	QTY KIT
1	585 43 54-01	HANDLE	FRONT HANDLE	1
2	585 43 59-02	TRIGGER	TRIGGER (GOLD)	1
3	585 43 60-02	THROTTLE LOCKOUT	LOCKOUT (GOLD)	1
4	585 43 56-01	HANDLE	REAR HANDLE	1
5	585 18 73-01	SPRING	TRIGGER SPRING	1
6	530 01 59-06	SCREW	SCREW	4
7	585 43 57-01	HANDLE	REAR HANDLE COVER	1
8	530 01 63-49	SCREW	SCREW	3

KEES VAN DER SPEK
TUINMACHINES ★ STOLWIJK

WARNING

All repairs, adjustments and maintenance not described in the Operator's Manual must be performed by qualified service personnel.

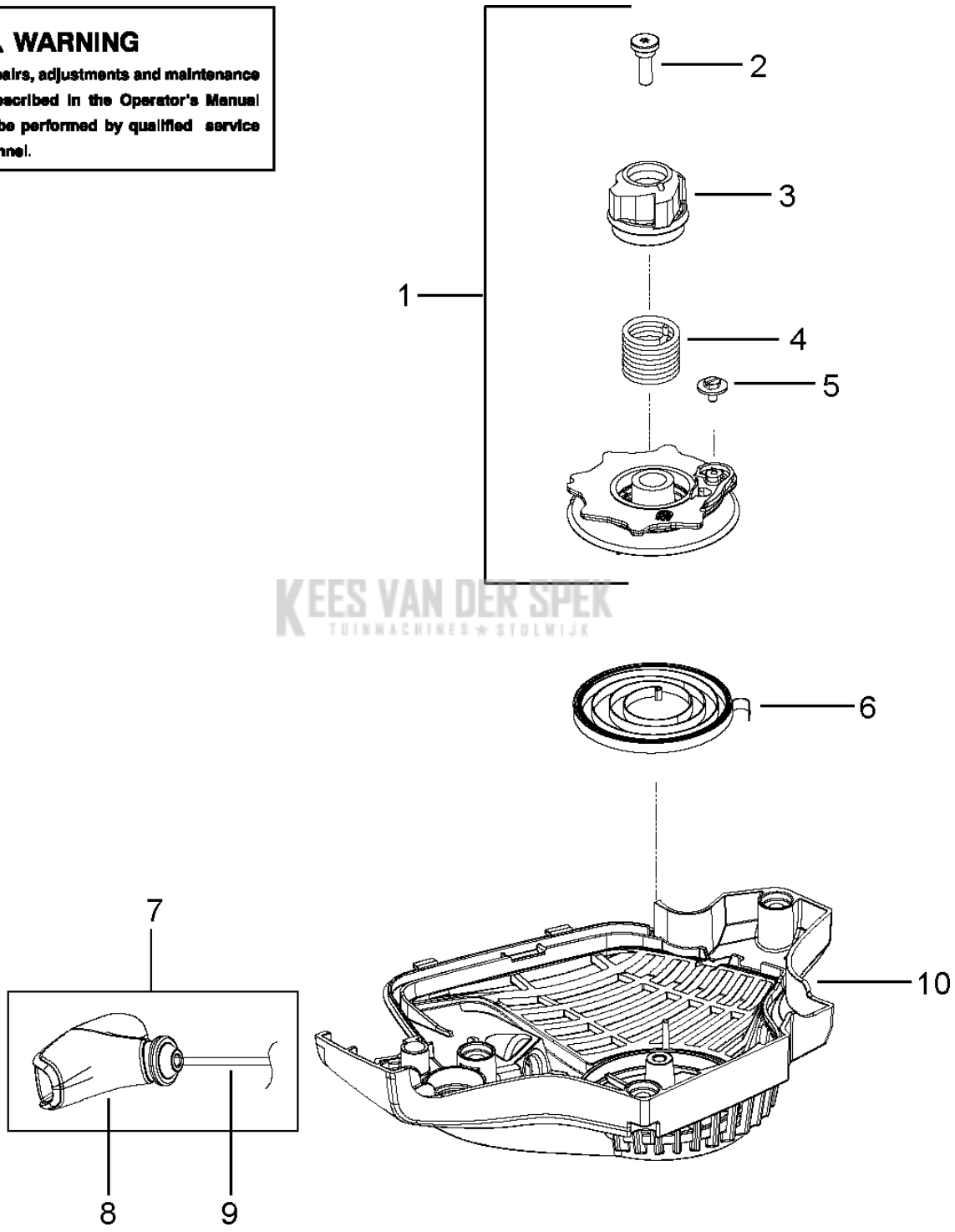

KEES VAN DER SPEK
TUINMACHINES ★ STOLWIJK

Ref	Part No	Description	Remark	QTY KIT
1	530 07 19-66	STARTER PULLEY	"EPS STARTER KIT (INCL. 2,3,4,5, PULLEY)"	1
2	530 02 11-79	SCREW	SCREW	1
3	530 05 96-77	SLEEVE	EPS STARTER HUB SLEEVE	1
4	530 02 11-80	SPRING	TORSION SPRING	1
5	530 01 60-80	SCREW	SCREW	1
6	576 65 78-01	SPRING	STARTER SPRING	1
7	545 01 00-09	HANDLE	HANDLE AND ROPE ASSY	1
8	545 00 61-08	HANDLE	STARTER HANDLE (GRAY)	1
9	530 06 92-32	STARTER ROPE	STARTER ROPE	1
10	586 86 72-01	FAN HOUSING	FAN HOUSING (BLACK)	1

KEES VAN DER SPEK
TUINMACHINES ★ STOLWIJK