SPARE PARTS CATALOGUE

: HUSQVARNA 225I ACCU KETTINGZAAG ZONDER ACCU EN LADER

KEES VAN DER SPEK
TUINMACHINES ★ STOLWIJK

Spare Parts List

SPARE PARTS LIST

KEES VAN DER SPEK

A 225i
FUEL TANK

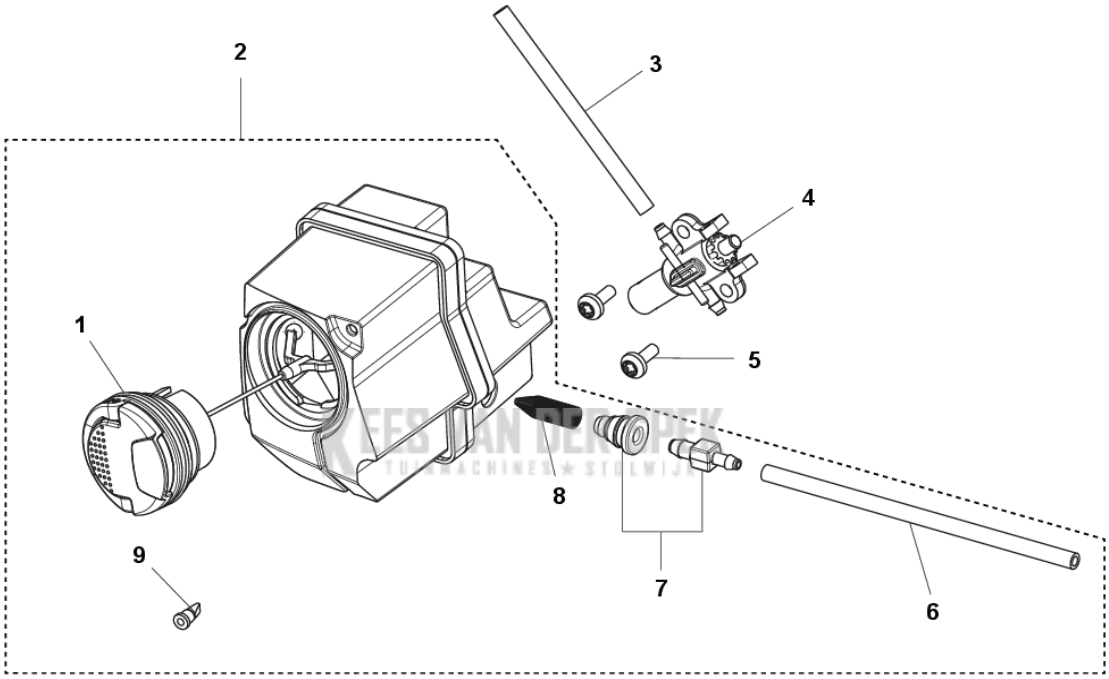

PXM_REF	PXM_ PARTNO	DESCRIPTION	PXM_REMARK	QTY.
1	522620003	TANKDEKSEL COMPL.		1
2	537648201	TANK COMPL.		1
3	585566601	OLIESLANG		1
4	579043901	OLIEPOMP		1
5	586902901	SCREW		2
6	535670301	OLIESLANG		1
7	537648301	AFDICHTING		1
8	530056533	VIZIER		1
9	575484501	VALVE NIPPLE		1

KEES VAN DER SPEK
TUINMACHINES ★ STOLWIJK

B 225i HOUSING

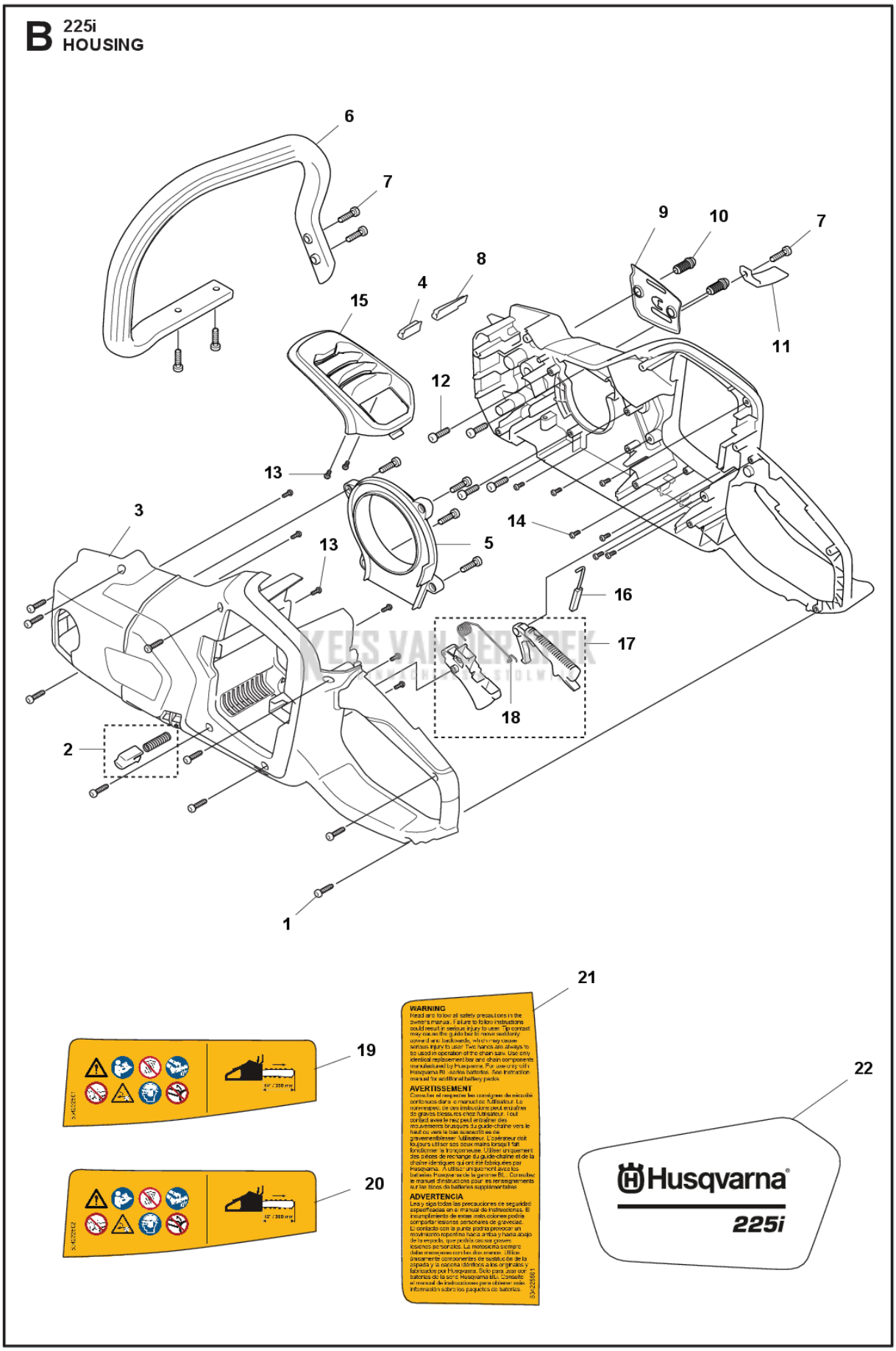

PXM_REF	PXM_ PARTNO	DESCRIPTION	PXM_REMARK	QTY.
1	585819002	SCREW		9
2	536503301	VEERCASSETTE COMPL.		1
3	534991601	HUIS COMPL.		1
4	536629301	RUBBERPLUG		1
5	534993101	DEKSEL		1
6	534993001	VOORSTE BEUGEL		1
7	585592501	SCREW		5
8	536629201	RUBBERPLUG		1
9	585602701	MOUNTING PLATE		1
10	587426601	SCREW		2
11	505288501	KETTINGVANGER		1
12	585819001	SCREW		8
13	585818901	SCREW		2
14	535395201	SCREW KIT		13
15	534993301	DEKSEL		1
16	585589301	HEFBOOM		1
17	537664901	TREKKER		1
18	535671101	VEER		1
19	534232501	PLAATJE	US	1
20	534232502	PLAATJE		1
21	534225601	PLAATJE	US	1
22	537512801	PLAATJE		1

KEES VAN DER SPEK
TUINMACHINES ★ STOLWIJK

C 225i
CHAIN BRAKE

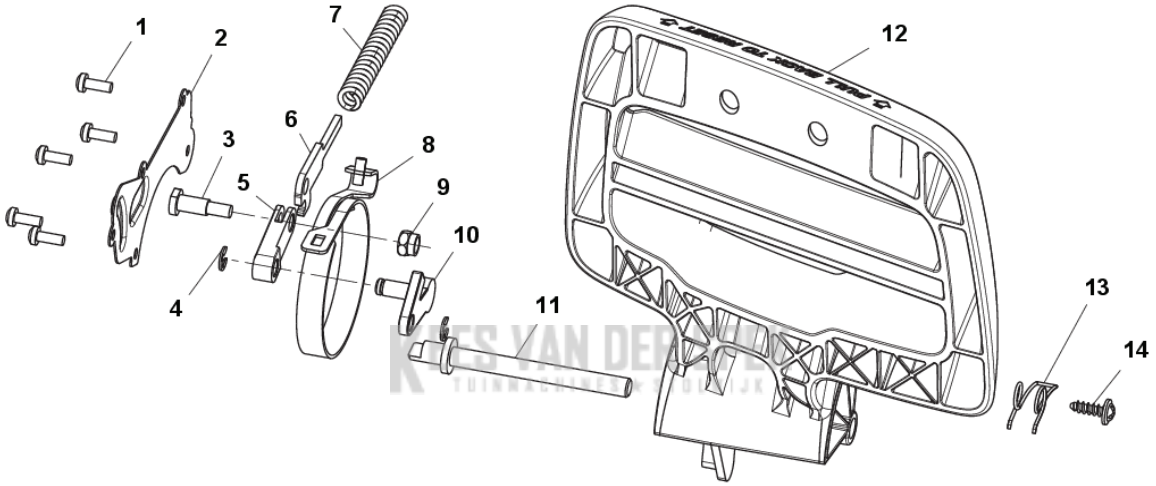

PXM_REF	PXM_ PARTNO	DESCRIPTION	PXM_REMARK	QTY.
1	586903001	SCREW		5
2	536629001	DEKSEL		1
3	586902601	PENNEN		1
4	587377701	KLEM		2
5	585603501	PLAAT		1
6	585594401	PLAAT		1
7	585590501	REMVEER		1
8	536629101	BAND		1
9	586902701	MOER		1
10	582488701	AANDRIJFSTANG		1
11	585931901	AS		1
12	585581301	REM		1
13	587600101	VEER		1
14	575309802	SCREW		1

KEES VAN DER SPEK
TUINMACHINES ★ STOLWIJK

D 225i DRIVE

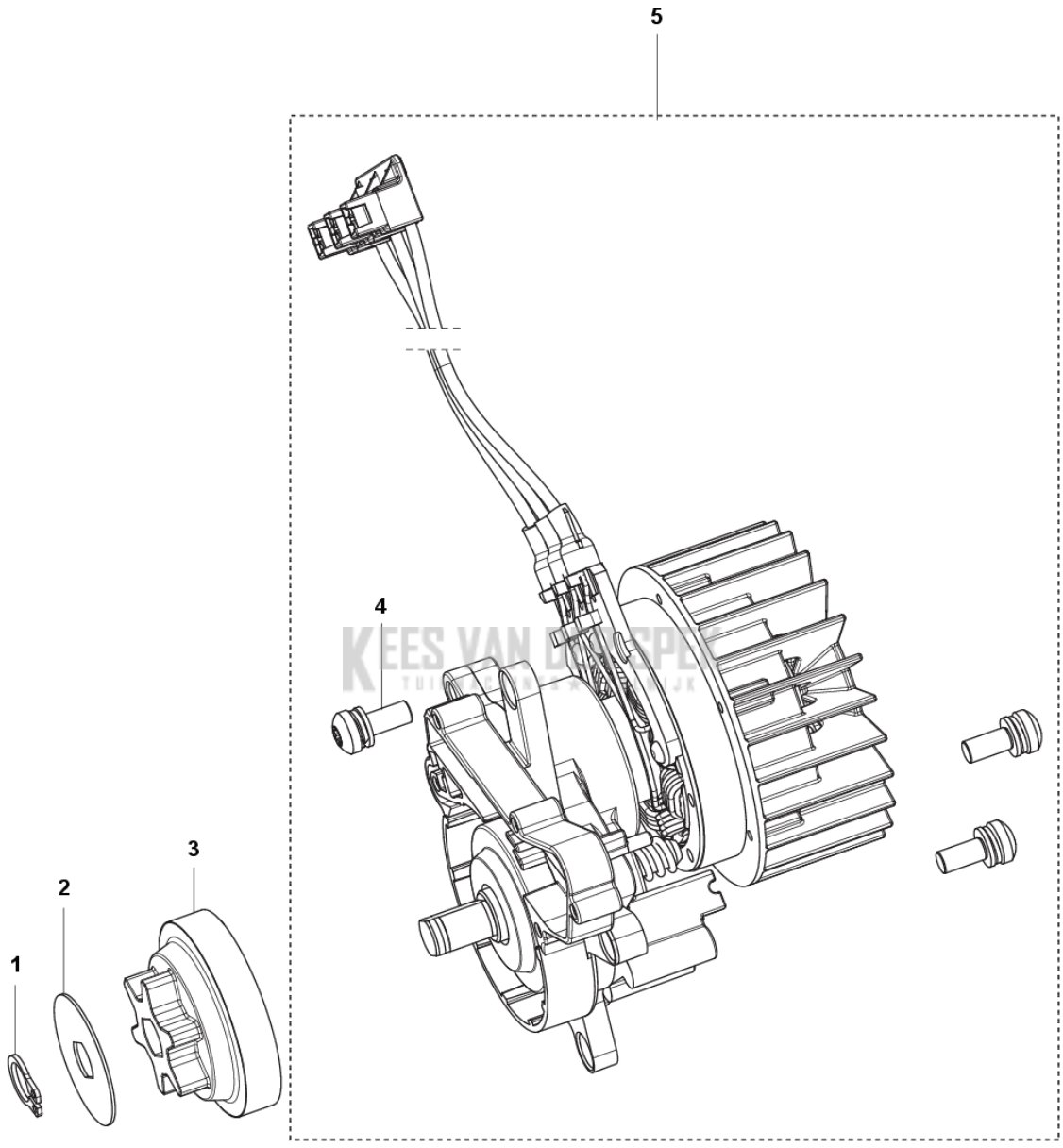

KEES VAN DOORSPEET

PXM_REF	PXM_ PARTNO	DESCRIPTION	PXM_REMARK	QTY.
1	574797701	BORG RING		1
2	585602001	RING		1
3	585589601	SPROCKET		1
4	586902802	SCREW		3
5	537648401	MEENEMER COMPL.		1

KEES VAN DER SPEK
TUINMACHINES ★ STOLWIJK

E 225i
CLUTCH COVER

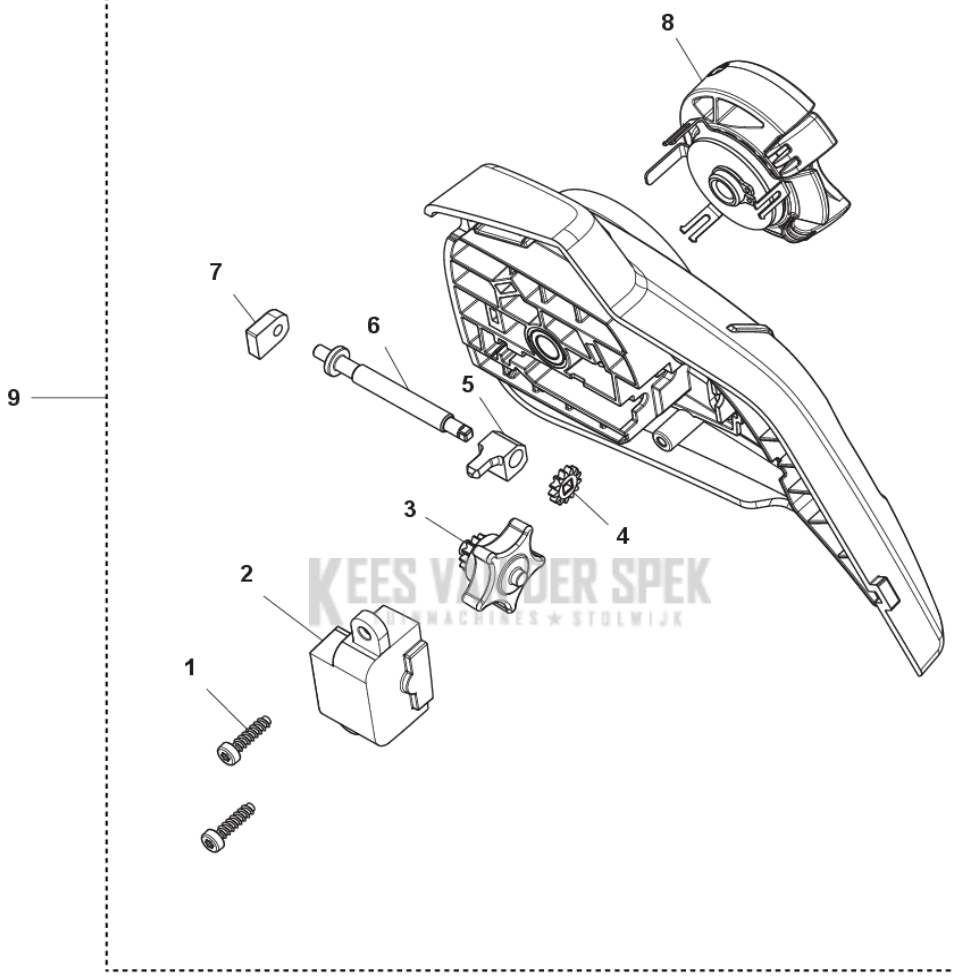

KEES VANDER SPEK
OUTDOOR MACHINES ★ STOLWIJK

PXM_REF	PXM_ PARTNO	DESCRIPTION	PXM_REMARK	QTY.
1	585819001	SCREW		2
2	585593401	DEKSEL		1
3	578776501	KETTINGSPANNER		1
4	585593501	RONDSEL		1
5	585593701	PLAAT		1
6	585593901	AS		1
7	585594001	HULS		1
8	591471101	KNOP		1
9	537648501	KOPPELING COMPL.		1

KEES VAN DER SPEK
TUINMACHINES ★ STOLWIJK

F 225i
CLUTCH COVER

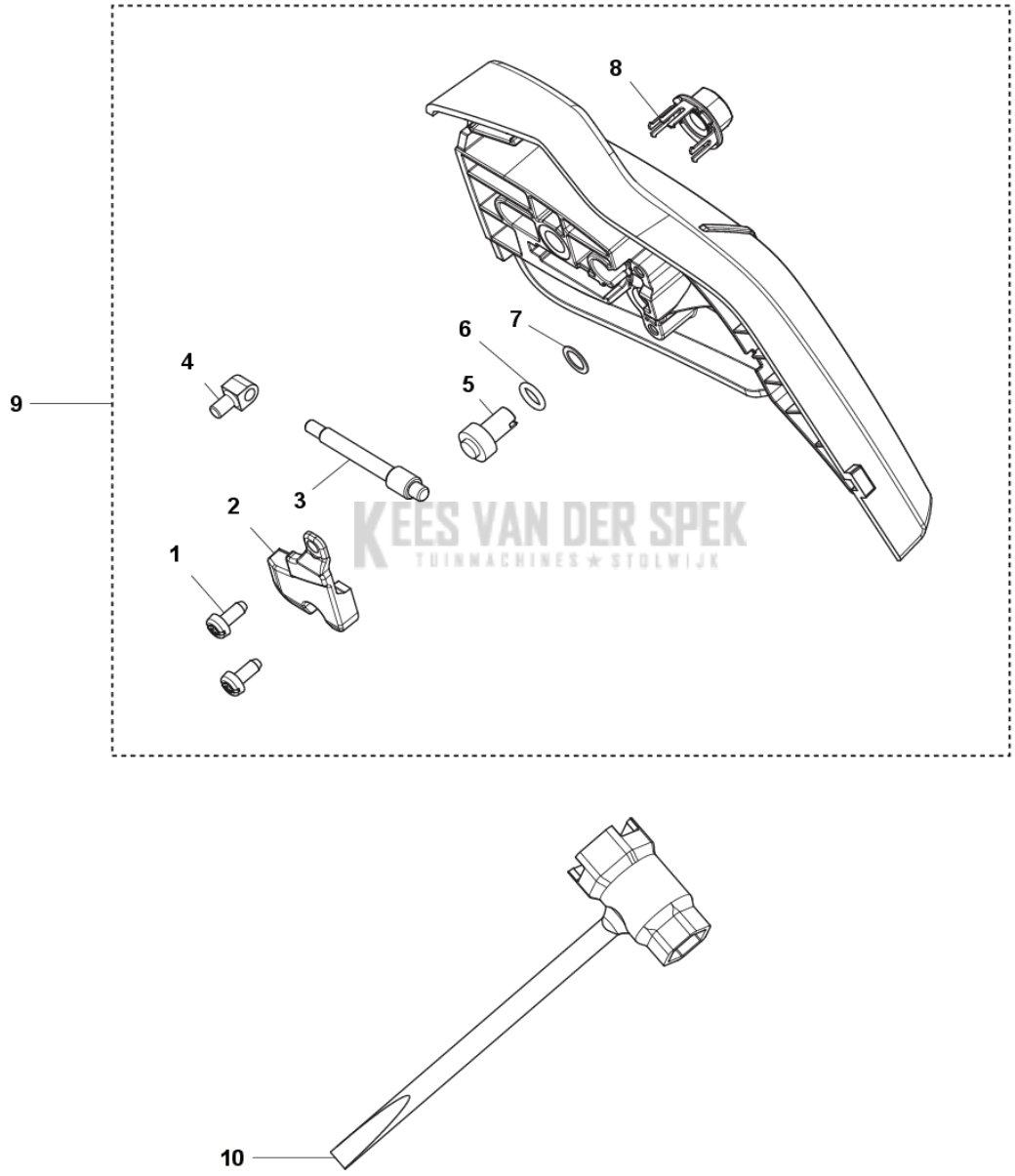

KEES VAN DER SPEK
TUINMACHINES ★ STOLWIJK

PXM_REF	PXM_ PARTNO	DESCRIPTION	PXM_REMARK	QTY.
1	585819001	SCREW		2
2	535287501	DEKSEL		1
3	537397001	WORMSCHROEF		1
4	588850301	PEN		1
5	599724101	WORMWIEL		1
6	740480702	O-RING		1
7	503230063	RING		1
8	505197301	MOER		1
9	537648601	KOPPELING COMPL.		1
10	587465401	SLEUTEL		1

KEES VAN DER SPEK
TUINMACHINES ★ STOLWIJK

G 225i ELECTRICAL

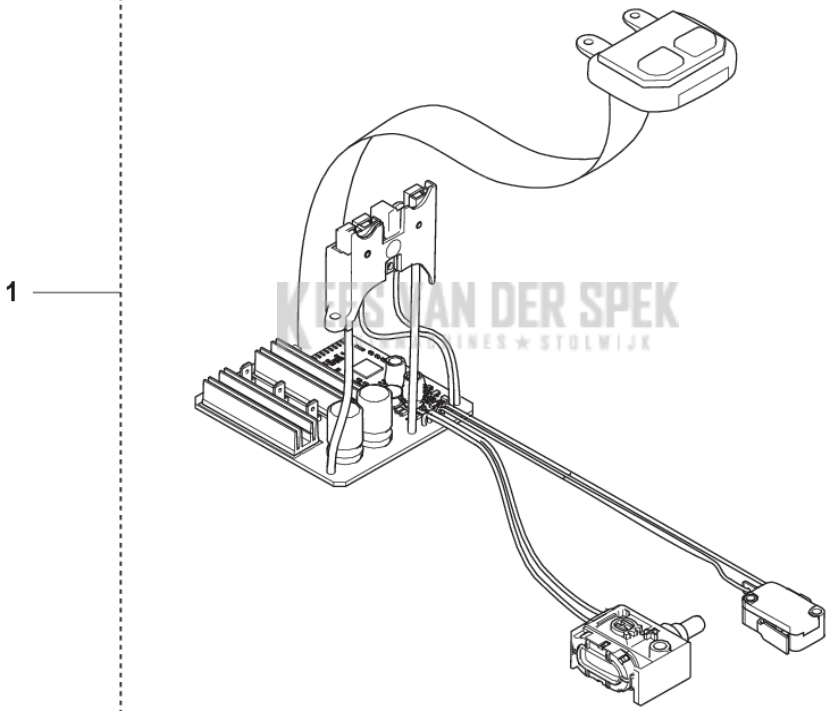

KEES VAN DER SPEK
MACHINES ★ STOLWIJK

PXM_REF	PXM_ PARTNO	DESCRIPTION	PXM_REMARK	QTY.
1	535581101	ELEKTRISCH SYSTEEM	RoW	1
1	535581102	ELEKTRISCH SYSTEEM	US	1

KEES VAN DER SPEK
TUINMACHINES ★ STOLWIJK