SPARE PARTS CATALOGUE

LAWN CARE EQUIPMENT: HUSQVARNA S 500 PRO

KEES VAN DER SPEK
TUINMACHINES ★ STOLWIJK

Spare Parts List

SPARE PARTS LIST

LAWN CARE EQUIPMENT

HUSQVARNA S 500 PRO

TUINMACHINES ★ STOLWIJK

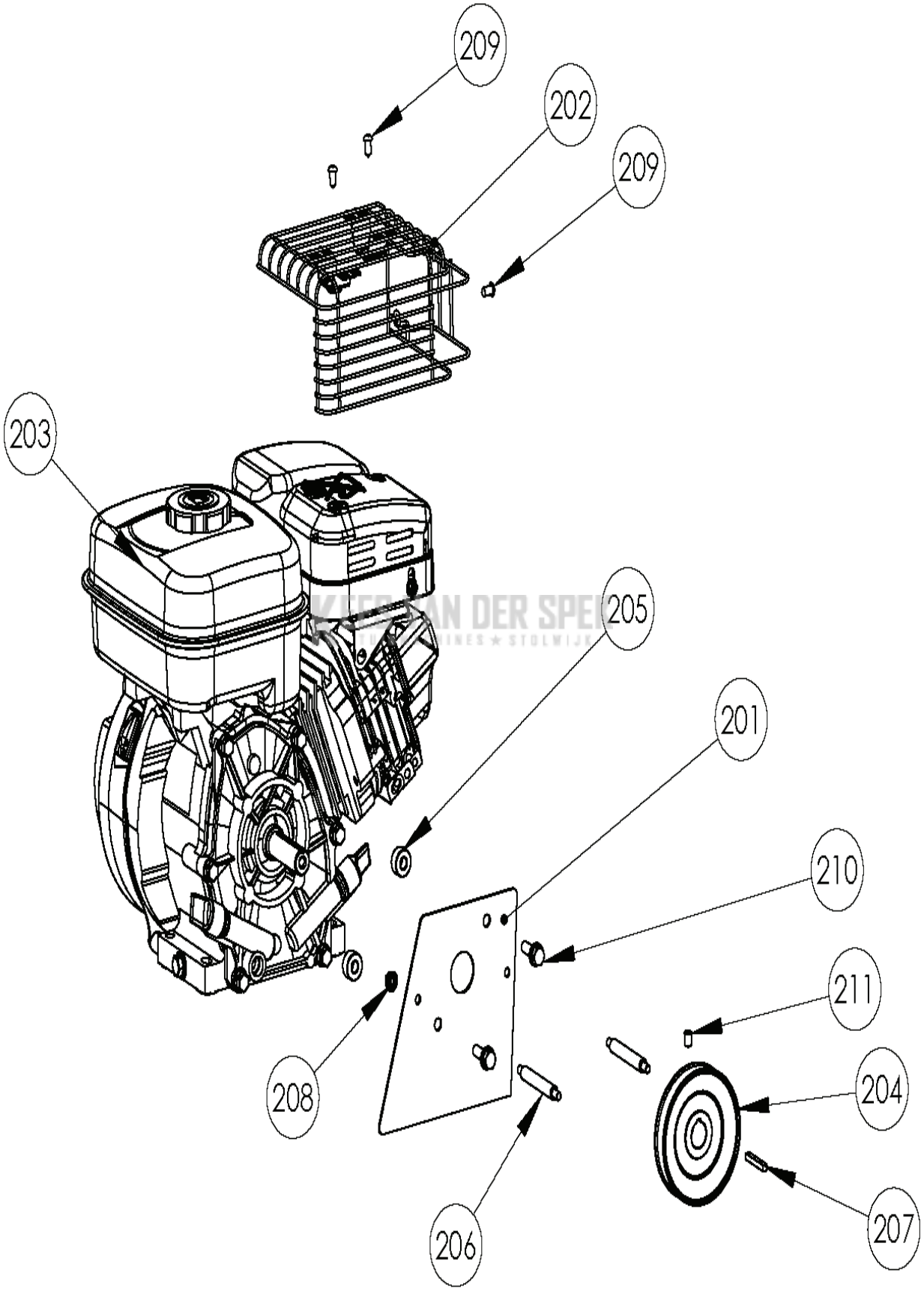
209
202
209
203
205
201
210
211
208
204
206
207

PXM_REF	PXM_ PARTNO	DESCRIPTION	PXM_REMARK	QTY.
201	534100194	TOLE PROTECTION POULIE MOTEUR	FOR ENGINE'S PULLEY	1
202	534009045	GRILLE PRTOEC.MOTEUR ROBIN	SUBARU EP 17	1
203	582418901	MOTOR	BRIGGS 950 SERIES HORIZONTAL	1
203	534009739	MOTOR	SUBARU EP 17	1
204	534100169	POULIE MOTEUR		1
205	534100154	ENTRETOISE TOLE PROTECTRICE		2
206	534100162	BIJL		2
207	534004526	CLAVETTE 4.76X37	4.76 X 4.76 X 37	1
208	534100008	MOER	H M6 Z NOTCHED SHOULDER	2
209	534100259	SCREW	TCL POZ 6.3 X 13 ZN, SUBARU EP 17	3
210	534003817	SCREW	TH5/16X25 NOTCHED SHOULD	2
211	534000421	SCREW	STHC 8 X 10	1

KEES VAN DER SPEK
TUINMACHINES ★ STOLWIJK

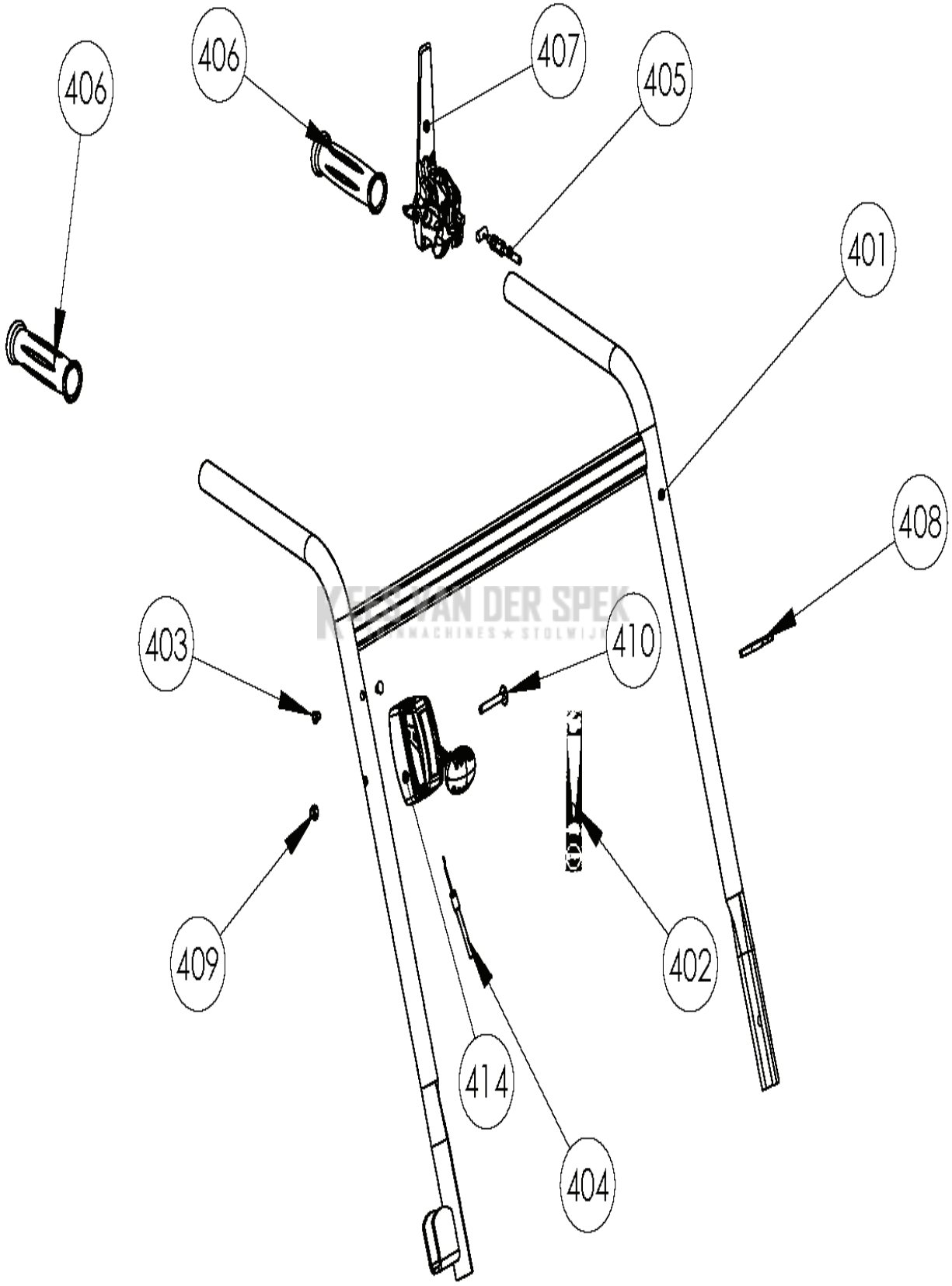

KERSTAN DER SPEK
MACHINES ★ STOLWIJK

PXM_REF	PXM_ PARTNO	DESCRIPTION	PXM_REMARK	QTY.
401	534100240	MANCHERON	DARK GRAY HANDLEBAR SCARIF 50	1
402	534100265	TBD	ENGINE SPEED VARIATION	1
403	534100021	OBTURATEUR	10 X 7 X 6.5	2
404	534009737	GASKABEL		1
405	534009711	KABEL		1
406	534100054	POIGNEE CAOUTCHOUC		2
407	534009709	LEVER ASSY		1
408	534009120	KRAAG		4
409	534004265	MOER	M6	1
410	534009744	SCREW	TRCC 6 X 45	1
414	534009736	GASHEFBOOM		1

KEES VAN DER SPEK
TUINMACHINES ★ STOLWIJK

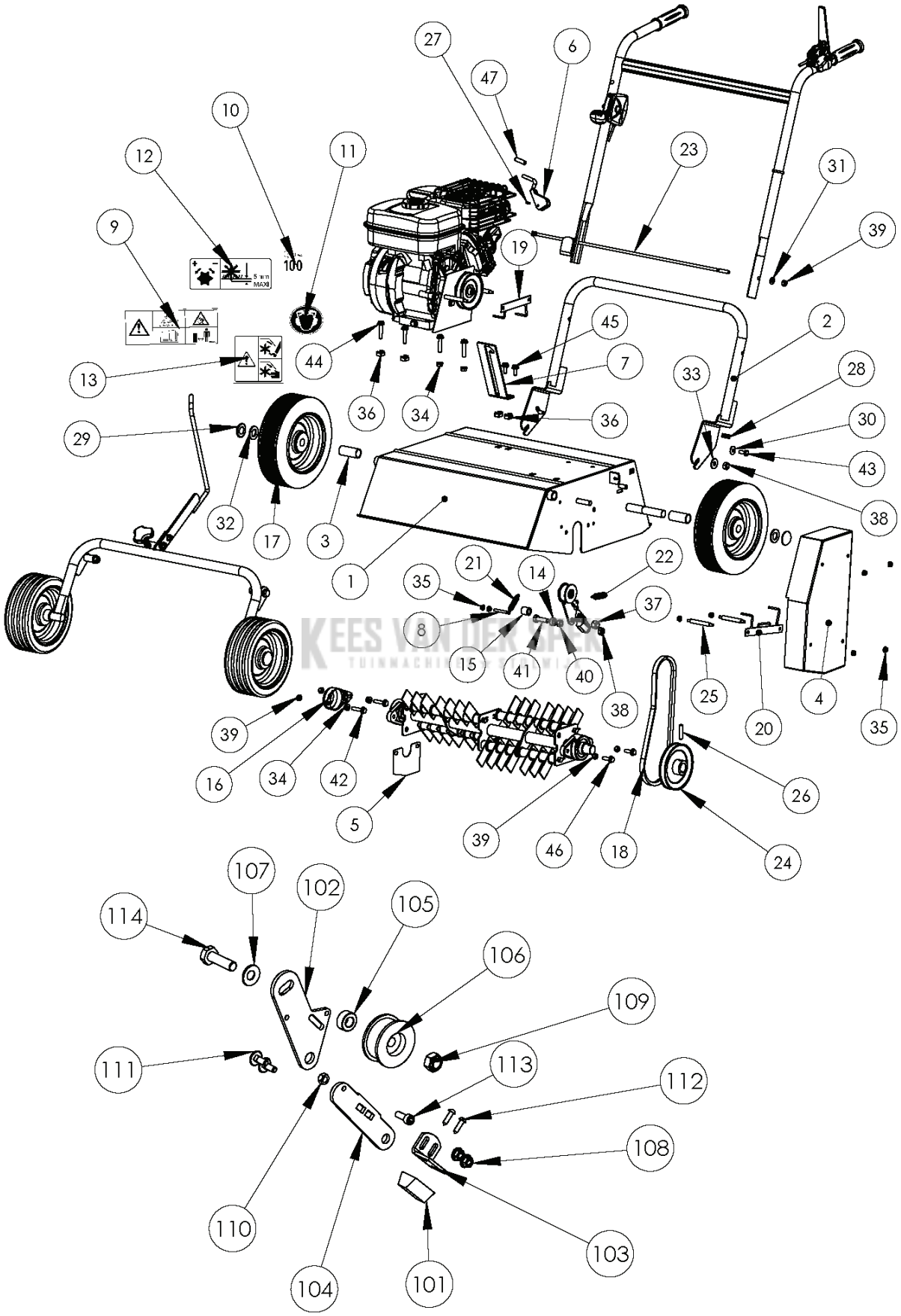
27
6
47
10
11
12
23
31
9
39
19
100
45
2
44
7
13
33
28
36
34
36
30
29
43
38
32
17
3
1
21
14
22
35
37
8
15
41
40
38
25
20
4
35
39
16
34
42
5
39
46
18
26
24
107
102
105
114
106
109
111
113
112
108
110
103
104
101

PXM_REF	PXM_ PARTNO	DESCRIPTION	PXM_REMARK	QTY.
1	534100228	CARTER	ORANGE, SCARIF 50	1
2	534100232	SUPPORT MANCHERON	DARK GRAY	1
3	534100251	ENTRETOISE ROUE ARR.	FOR REAR WHEEL	2
4	534100192	KAP	BLACK	1
5	534009752	PLAAT	BLACK	1
6	588823701	HEFBOOM		1
7	534100182	SELECT.REGLAGE HAUTEUR		1
8	534006392	SCREW		1
9	534100061	STICKER	CAUTION OF USE	1
10	534004611	STICKER	100 D.B.A	1
11	534100285	STICKER	EARMUFF	1
12	534100268	STICKER	HEIGHT ADJUSTMENT	1
13	534100267	STICKER	DANGER	1
14	534100160	ENTRETOISE PLASTIQUE		1
15	534100161	ENTRETOISE LEVIER EMBRAYAGE		1
16	534009753	DEKSEL		1
17	534009065	WIEL	250 X 80	2
18	534100241	COURROIE ROTOR	LA33	1
19	534100314	PLAQUE DE DEBRAYAGE SUPERIEUR	UPPER	1
20	534100313	PLAQUE DE DEBRAYAGE INFERIEUR	LOWER	1
21	534100246	RETOURVEER		1
22	534006390	RETOURVEER		1
23	534100166	TRINGLE BLOCAGE	LOCKING AXLE	1
24	534100282	POULIE DE ROTOR	SCARIF 50	1
25	534100162	BIJL		2
26	534009061	GOUPILLE ROULEE 8X40	8x40 HBK	1
27	534009062	GOUPILLE ROULEE 4X16	4x16 HBK	1
28	534004793	PASSE FIL CAOUTCHOUC		1
29	534100023	ENJOLIVEUR DIAM:20		2
30	534002478	RING	M8	2
31	534002014	RING	M8	1
32	519653434	RING	20 X 36 X 3	2
33	534000724	RING	27 x 10.25 x 2 ZN	2
34	534100020	MOER	M8 NOTCHED SHOULDER	4
35	534100008	MOER	H M6 Z NOTCHED SHOULDER	8
36	534004822	MOER	M8 C 4808B	6
37	534002484	MOER	M10	1
38	534001297	MOER	M10	3
39	534003774	MOER	M8	5
40	534000709	MOER	HU M10	1
41	534000880	SCREW	10 x 35	1
42	534009754	SCREW	HM 8x35 notched shoulder	2
43	534002209	SCREW	HM 8 x 20	2
44	534100266	SCREW	H NOTCHED SHOULDER 8 X 40	4
45	534100019	SCREW	H NOTCHED SHOULDER 8 X 20	2
46	534100278	SCREW	H NOTCHED SHOULDER 8 X 25	2
47	588823801	KAP	¯ 7.5 x 35	1
101	534100253	FREIN DE ROTOR		1
102	534100184	HEFBOOM		1
103	534100190	EQUERRE FIXATION COURROIE		1
104	534100186	HEFBOOM		1
105	534100312	ENTRETOISE 10.5X20X9	10.5 x 20 x 9	1
106	534100258	GALET D'EMBRAYAGE		1
107	534001997	RING	M10	1
108	534100008	MOER	H M6 Z NOTCHED SHOULDER	2
109	534001297	MOER	M10	1
110	534000992	MOER	HU M6	1
111	534009079	SCREW	TRCC 6 x 16	2
112	534100259	SCREW	POZI DRIVE 4.2 x 15.9	2
113	534004544	SCREW	CHC 6 X 16 ZN	1
114	534000880	SCREW	10 x 35	1

KEES VAN DER SPEK
BINNENMACHINES OSTERWIJK

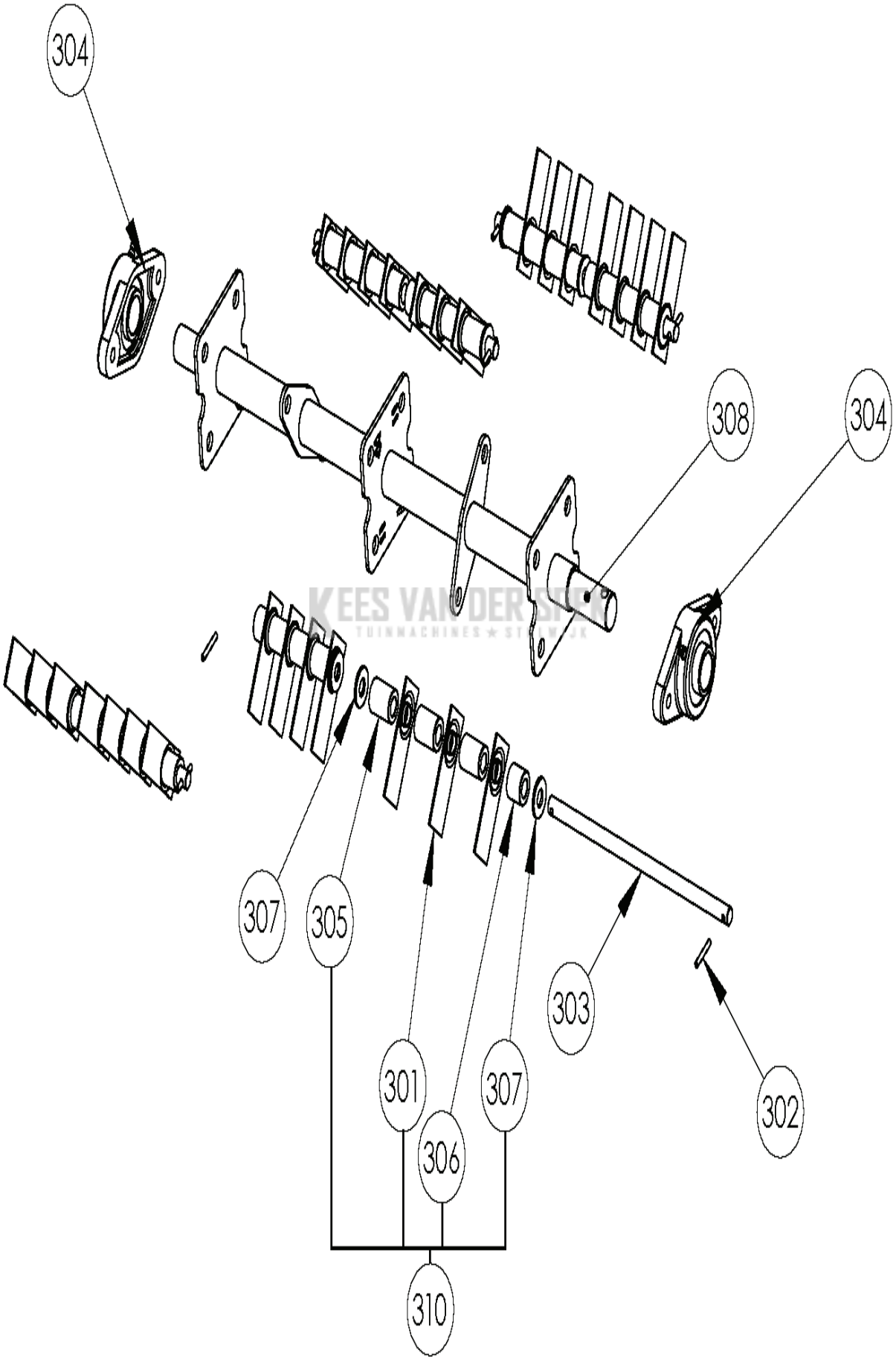

KEES VAN DER SPEK
TUINMACHINES ★ STOMWIJK

PXM_REF	PXM_ PARTNO	DESCRIPTION	PXM_REMARK	QTY.
301	588823301	MES		28
302	534009751	SPIE	4 x 30	8
303	534100155	AS		4
304	534100172	PALIER FONTE ROTOR	DIAM=25	2
305	588823601	AFSTANDRING	30,1	24
306	588823401	AFSTANDRING	20,4	8
307	519653453	RING	12X27X2.5 Z	12
308	534100318	ARBRE ROTOR RENFORCE		1
310	588823501	REPARATIESET	301=28 pcs, 305=24 pcs, 306=8 pcs, 307=12 pcs	1

KEES VAN DER SPEK
TUINMACHINES ★ STOLWIJK

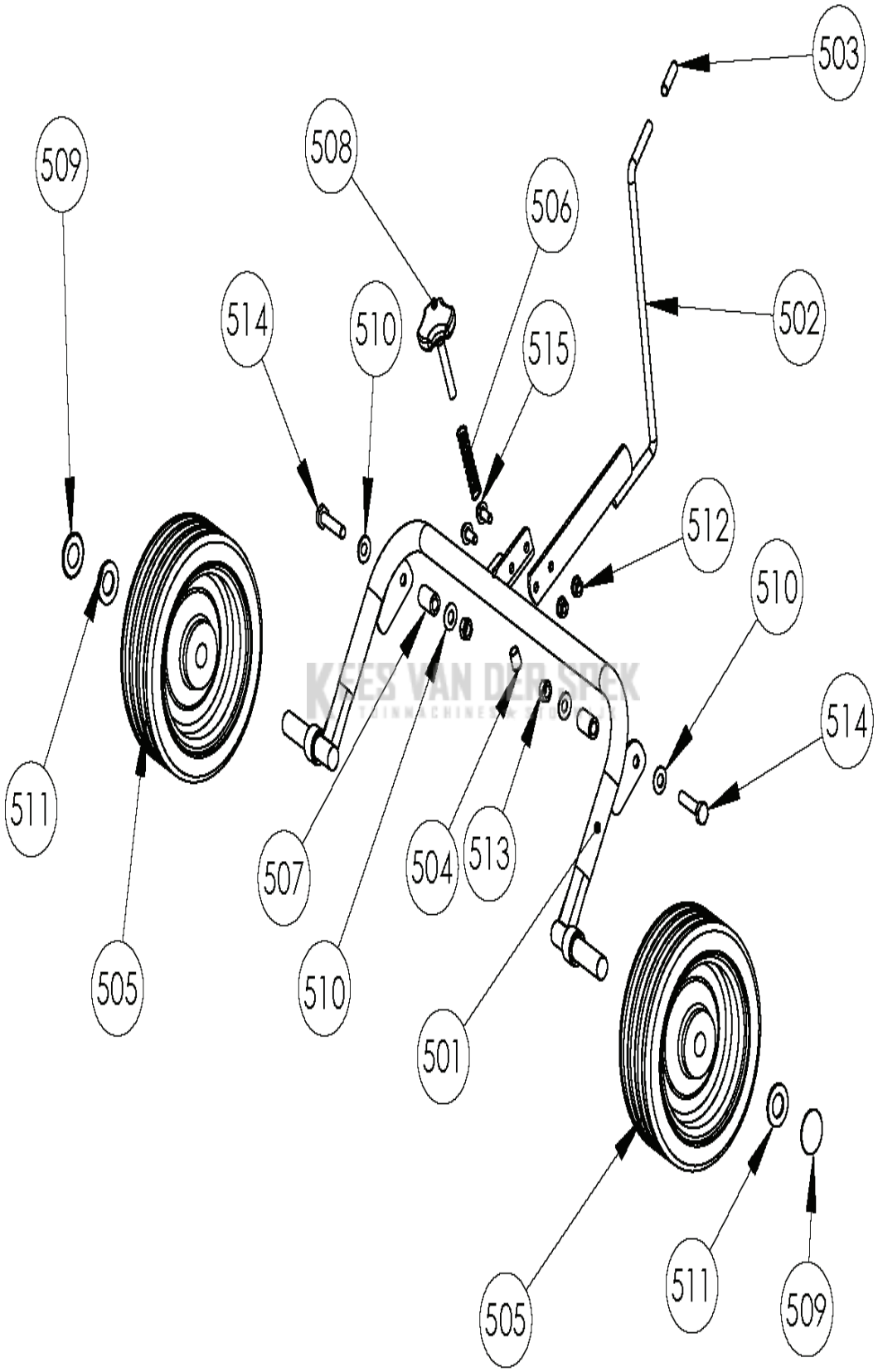
503
509
508
506
502
514
510
515
512
510
514
511
507
504
513
505
510
501
505
511
509

PXM_REF	PXM_ PARTNO	DESCRIPTION	PXM_REMARK	QTY.
501	534100236	TRAIN AVANT SOUDE	DARK GRAY FRONT AXLE SCARIF	1
502	534100175	HEFBOOM		1
503	534100243	EMBOUT PLASTIQUE DIAM:10	LENGTH : 50	1
504	534100144	KAP	EMBOUT ROND ENVELOPPANT	1
505	534009064	ROUE AVANT	210 X 75	2
506	534100145	VEER		1
507	534006016	ENTRETOISE ARTICULATION		2
508	534100242	MOLETTE DE REGLAGE		1
509	534100023	ENJOLIVEUR DIAM:20	¯20	2
510	534001997	RING	M10	4
511	519653434	RING	20 X 36 X 3	2
512	534100020	MOER	H M8 NOTCHED SHOULDER	2
513	534000709	MOER	HU M10	2
514	534006041	SCREW	TH 10 X 50 ZN	2
515	534100019	SCREW	H NOTCHED SHOULDER 8 X 20	2

KEES VAN DER SPEK
TUINMACHINES ★ STOLWIJK