Husqvarna

SPARE PARTS LIST

POWER CUTTERS

KEES VAN DER SPEK

K 1 PACE, 2022-01

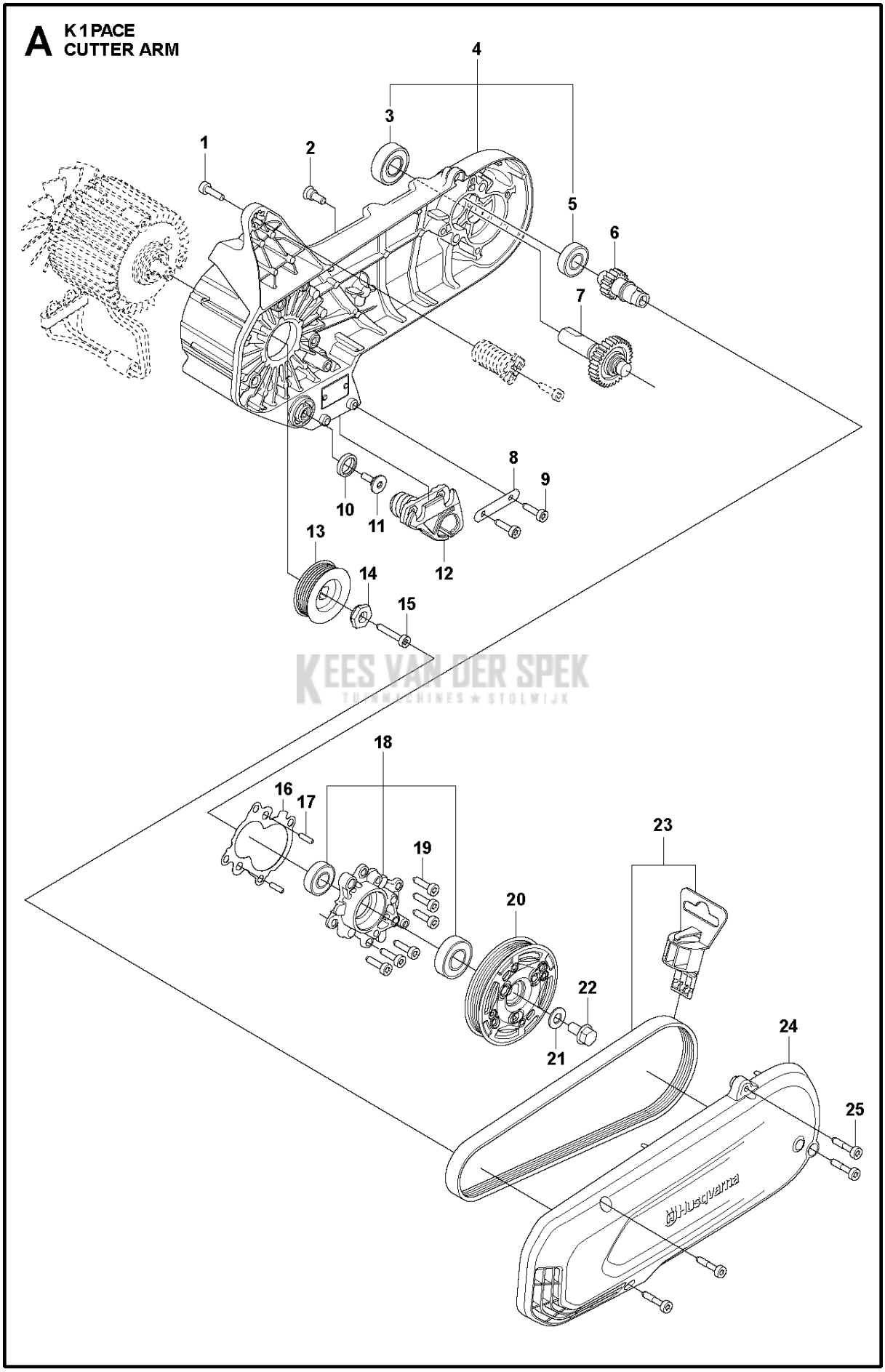

KEES VAN DER SPEK
TUINMACHINES ★ STOLWIJK

Ref	Part No	Description	Remark	QTY	KIT
1	503 21 54-20	SCREW ITXSCT		1	
2	584 99 43-01	SCREW		1	
3	738 22 02-19	BALL BEARING		1	4
4	531 33 30-01	CUTTER ARM		1	
5	590 52 58-01	BALL BEARING		1	4
6	593 77 30-01	SHAFT		1	
7	597 73 67-01	SHAFT		1	
8	522 47 48-01	PLATE		1	
9	503 21 53-16	SCREW ITXSCM		2	
10	598 93 54-01	BUSHING		1	
11	526 83 45-01	SCREW		1	
12	522 47 57-01	SPRING RETAINER		1	
13	597 73 66-02	PULLEY	Pulley 12"	1	
13	597 73 66-01	PULLEY	Pulley 14"	1	
14	504 03 83-01	SPACING SLEEVE		1	
15	544 21 84-20	SCREW ITXSCM		1	
16	597 73 69-01	GASKET		1	
17	593 80 60-01	GUIDE BUSHING		2	
18	598 40 44-01	LID		1	
19	503 21 53-20	SCREW ITXSCM		6	
20	590 89 58-01	PULLEY		1	
21	503 23 01-16	WASHER		1	
22	503 20 00-45	SCREW EHHFM		1	
23	529 95 96-01	BELT	Belt Kit 14"	1	
23	529 95 96-02	BELT	Belt Kit 12"	1	
24	599 47 46-01	BELT GUARD		1	
25	503 21 53-26	SCREW ITXSCM		4	

KEES VAN DER SPEK
TUINMACHINES ★ STOLWIJK

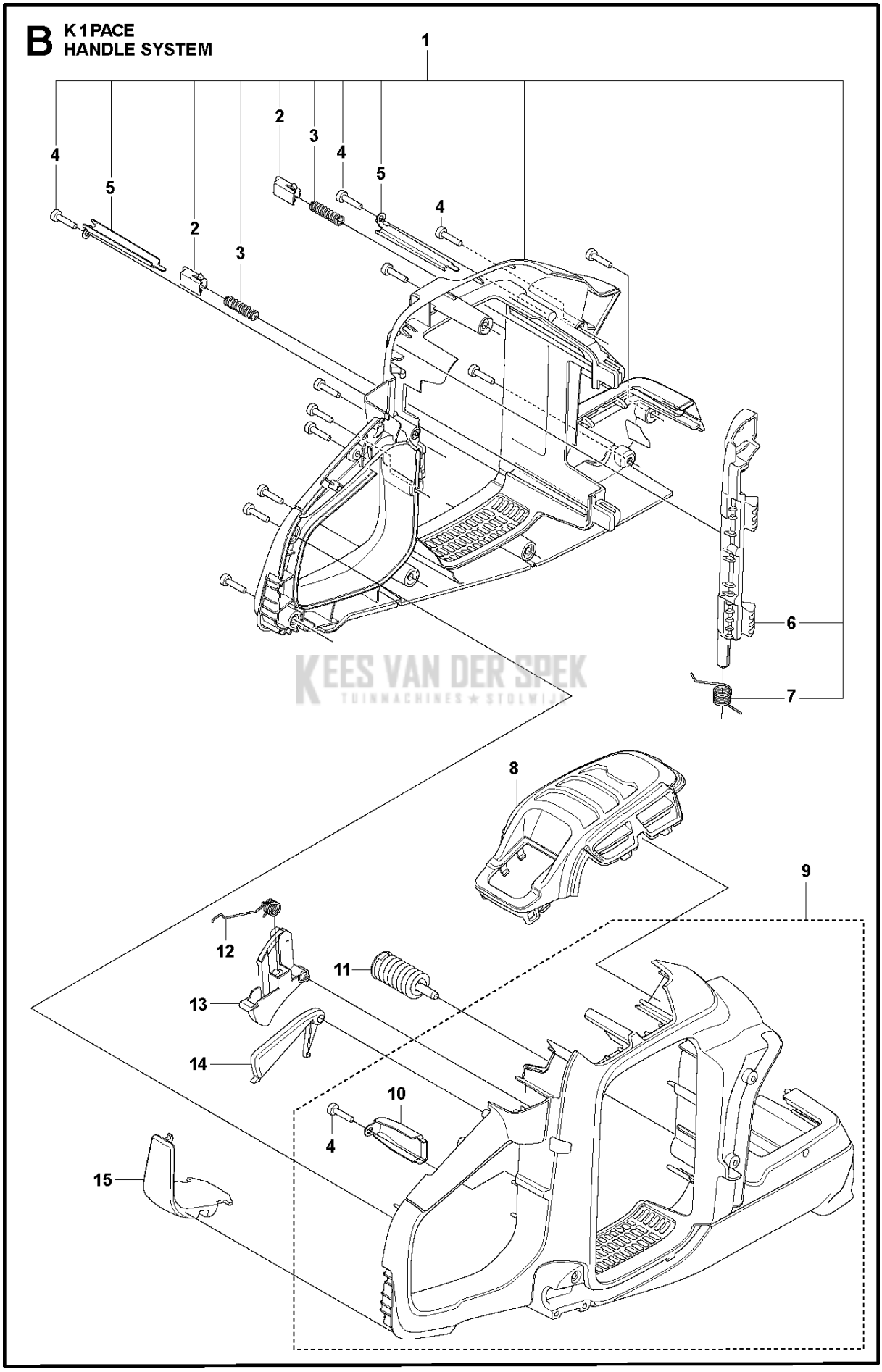
B K 1 PACE
HANDLE SYSTEM
1
2
3
4
5
6
7
8
9
10
11
12
13
14
15
KEES VAN DER SPEK
TUINMACHINES ★ STOLWIJK

Ref	Part No	Description	Remark	QTY	KIT
1	529 86 37-01	HANDLE HALF		1	
2	577 99 66-01	PUSH BUTTON		2	1
3	585 48 00-01	SPRING		2	1
4	580 29 29-01	SCREW ITXSCT		13	1, 9
5	599 52 82-01	PLATE		2	1
6	597 73 41-01	BUTTON		1	1
7	597 73 40-01	SPRING		1	1
8	597 62 39-01	COVER		1	
9	529 86 36-01	HANDLE HALF		1	
10	599 52 84-01	PLATE		1	9
11	537 21 03-05	ANTIVIBRATION ELEMENT		1	
12	599 37 35-01	SPRING		1	
13	595 83 40-01	THROTTLE TRIGGER		1	
14	506 49 57-01	THROTTLE LOCKOUT		1	
15	588 19 82-01	GROUND SUPPORT		1	

KEES VAN DER SPEK
TUINMACHINES ★ STOLWIJK

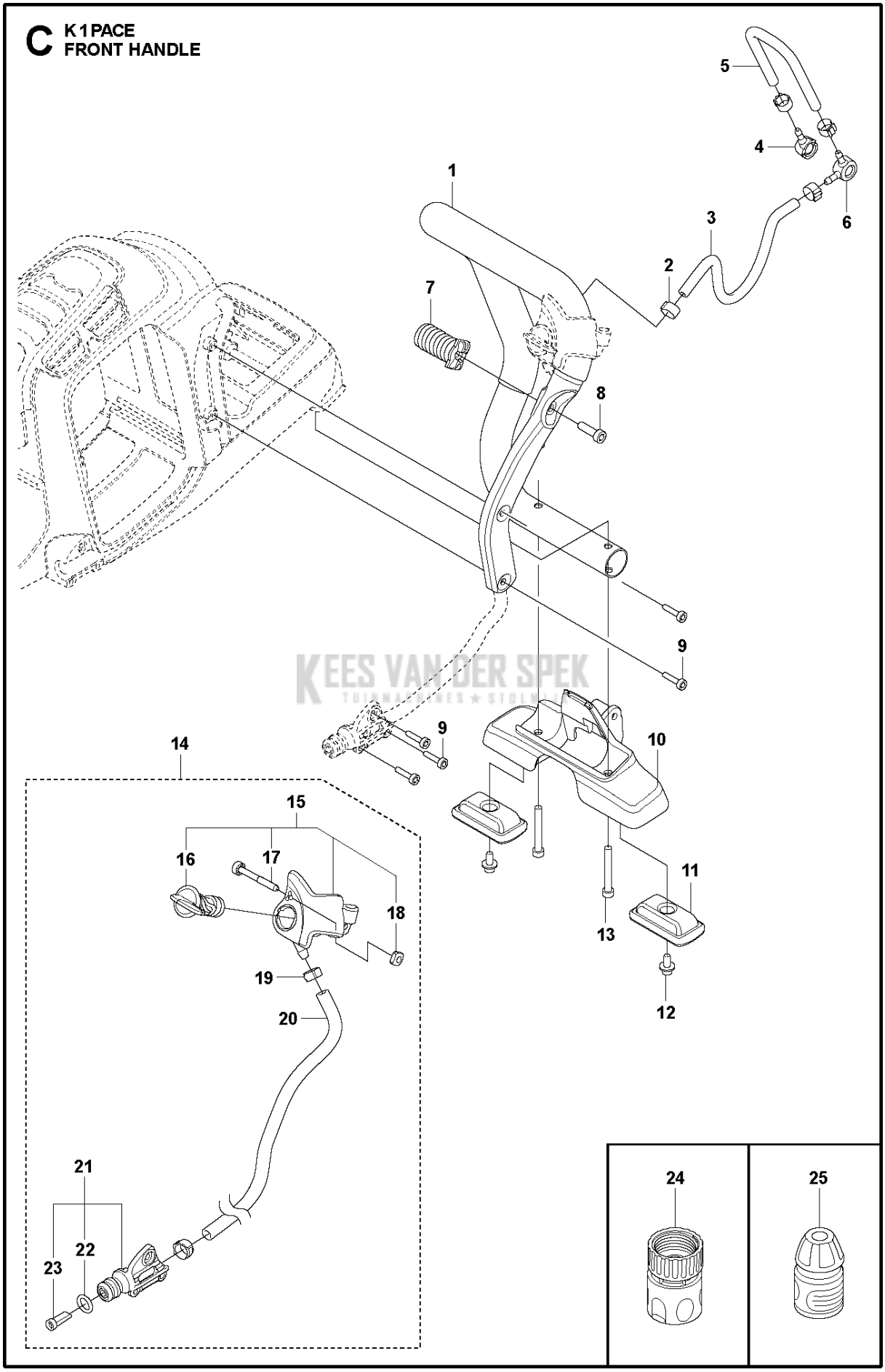

KEES VAN DER SPEK
TUINMACHINES ★ STOMP

Ref	Part No	Description	Remark	QTY	KIT
1	597 62 33-01	HANDLE		1	
2	506 49 87-04	HOSE CLAMP		3	
3	578 19 83-09	HOSE	HOSE L=270mm	1	
4	578 19 07-01	HOUSING		1	
5	578 19 83-08	HOSE	HOSE L=180mm	2	
6	578 19 08-01	HOUSING		1	
7	599 57 40-01	SPRING		1	
8	544 21 84-20	SCREW ITXSCM		1	
9	580 29 29-01	SCREW ITXSCT		5	
10	597 62 34-01	GROUND SUPPORT		1	
11	544 81 16-01	BASE		2	
12	525 82 44-01	SCREW ITXSCM		2	
13	589 58 33-01	SCREW		2	
14	529 99 82-01	HOSE		1	
15	578 24 33-02	VALVE ASSY		1	14
16	581 35 70-01	LEVER ASSY		1	14, 15
17	503 21 53-41	SCREW ITXSCM		1	14, 15
18	503 22 65-04	SQUARE NUT		1	14, 15
19	589 63 86-01	HOSE CLAMP		1	14
20	578 19 81-09	HOSE		1	14
21	529 96 39-01	NIPPLE		1	14
22	505 10 35-01	O-RING		1	14, 21
23	589 78 07-01	STRAINER		1	14, 21
23	589 78 07-01	STRAINER		1	14, 21
24	503 26 60-03	COUPLER	US	1	
25	503 26 60-04	COUPLER	RoW	1	

KEES VAN DER SPEK
TUINMACHINES ★ STOLWIJK

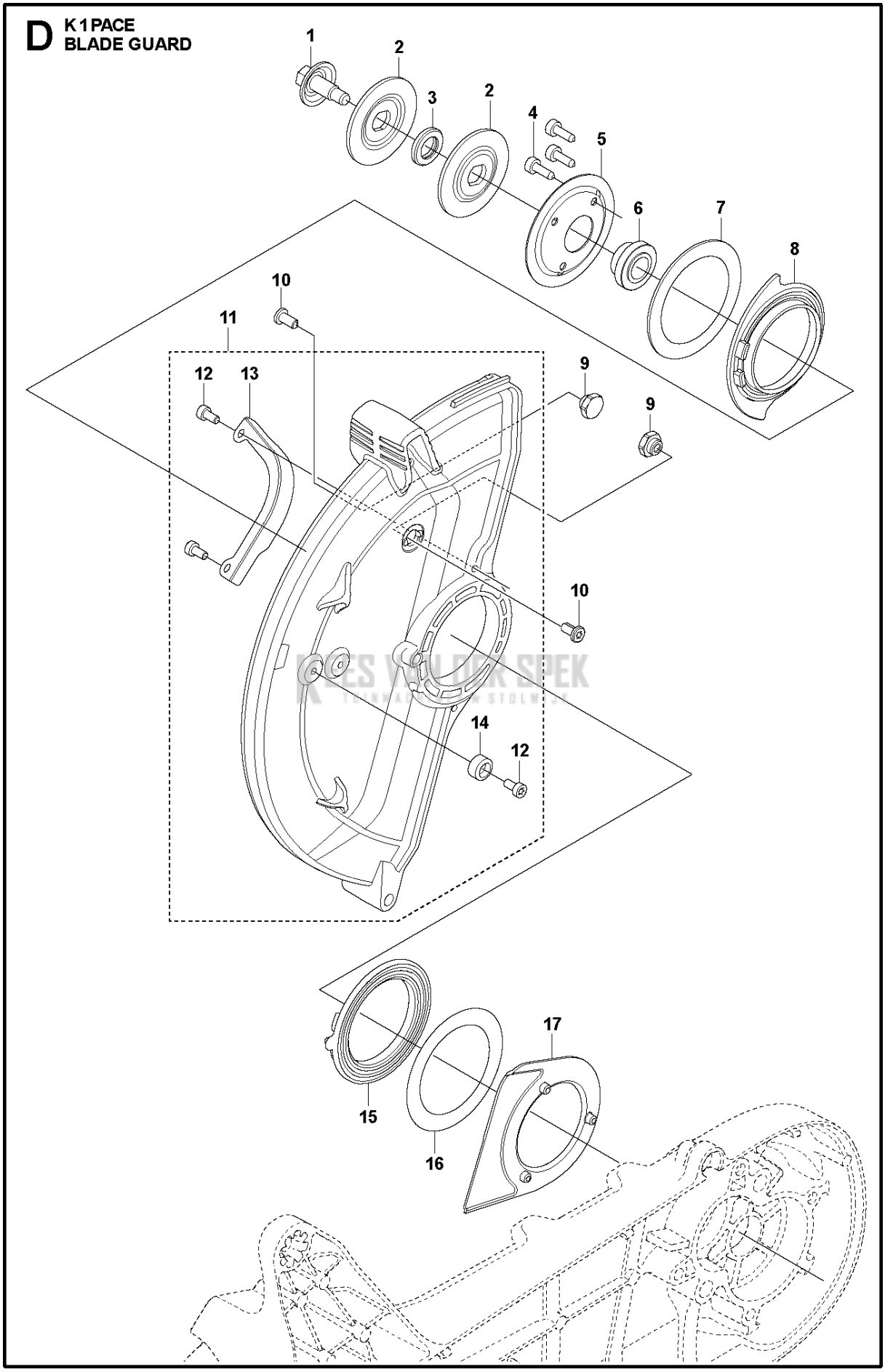
D
K 1 PACE
BLADE GUARD
1
2
3
2
4
5
6
7
8
10
11
12
13
9
9
10
14
12
17
15
16

Ref	Part No	Description	Remark	QTY	KIT
1	590 50 38-01	SCREW		1	
2	583 87 44-03	FLANGE	For Abrasive blade	2	
2	590 89 03-01	FLANGE	For Diamond blade	2	
3	598 93 54-01	BUSHING	DIAM 20mm	1	
3	598 93 54-03	BUSHING	DIAM 25.4mm	1	
3	598 93 54-04	BUSHING	DIAM 30,5mm	1	
4	503 21 53-16	SCREW ITXSCM		3	
5	597 75 90-01	FLANGE		1	
6	599 14 30-01	SUPPORT FLANGE		1	
7	594 02 42-01	SLIDE RING		1	
8	593 21 67-01	LINING		1	
9	576 79 84-03	NIPPLE		2	
10	504 63 46-02	SCREW ITXSCM		2	
11	529 86 39-01	BLADE GUARD	12"	1	
11	529 86 39-02	BLADE GUARD	14"	1	11
12	504 90 94-10	SCREW ITXSCT		3	11
13	593 21 68-01	WEAR PROTECTION		1	11
14	581 62 03-01	STOP		1	11
15	593 21 66-01	LINING		1	
16	579 73 33-01	SHIM		1	
17	593 21 70-01	SLIP RING HOLDER		1	

KEES VAN DER SPEK
TUINMACHINES ★ STOLWIJK

E **K 1 PACE**
MOTOR

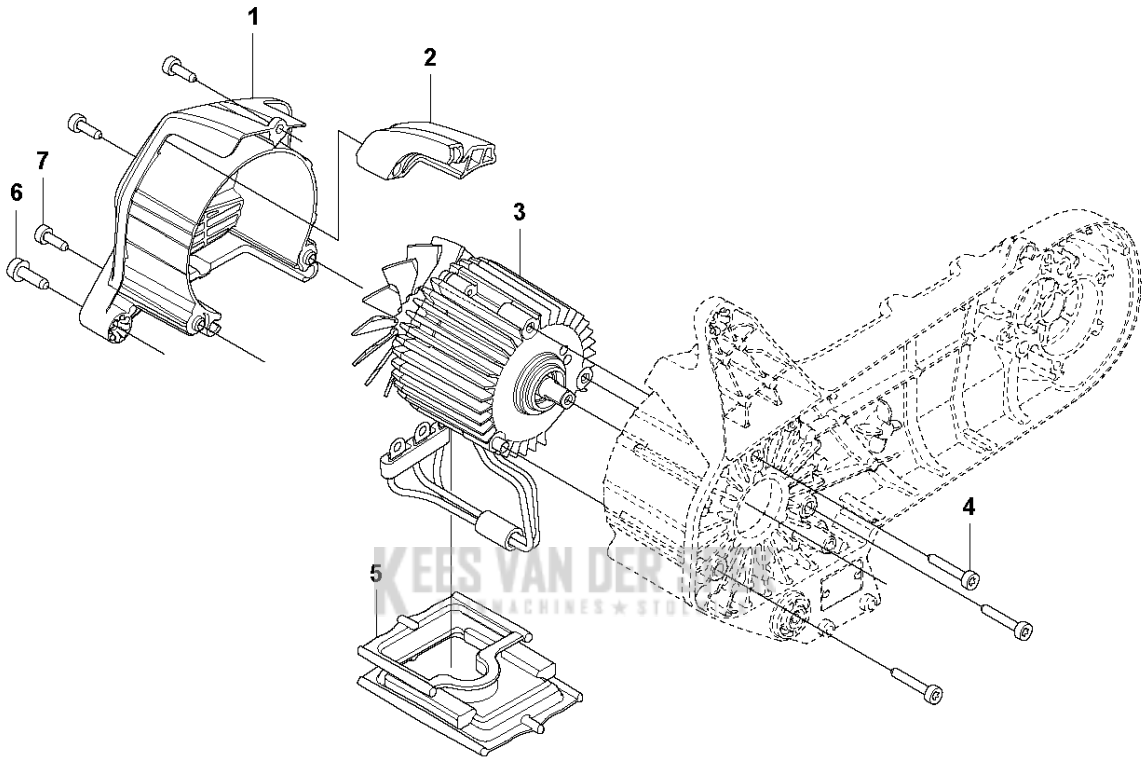

KEES VAN DER MACHINES ★ STUDER

Ref	Part No	Description	Remark	QTY KIT
1	597 62 35-01	MOTOR COVER		1
2	529 70 86-01	DAMPER		1
3	595 87 14-02	MOTOR ASSY		1
4	503 21 53-30	SCREW ITXSCM		3
4	544 21 84-20	SCREW ITXSCM		1
5	597 79 40-01	GROMMET		1
6	544 06 12-01	SCREW ITXSCM		1
7	503 21 53-20	SCREW ITXSCM		3

KEES VAN DER SPEK
TUINMACHINES ★ STOLWIJK

F **K 1 PACE**
ELECTRICAL

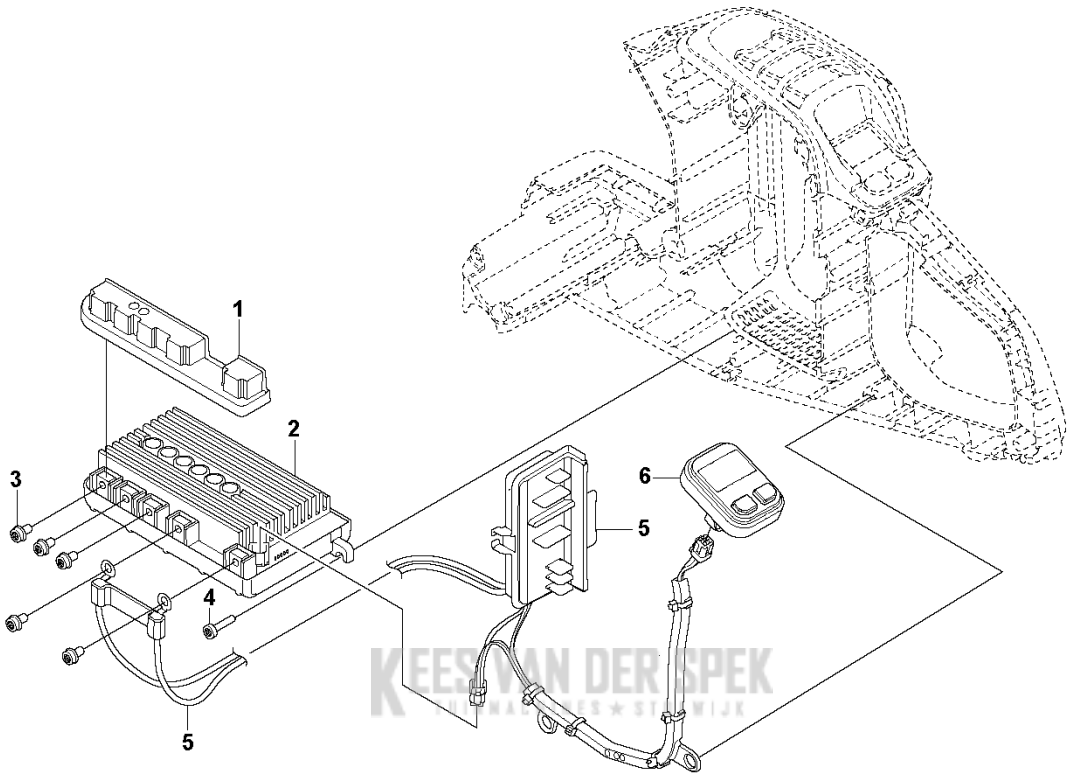

KEES VAN DER SPEK
LANDBOUWMACHINES ★ STEENWIJK

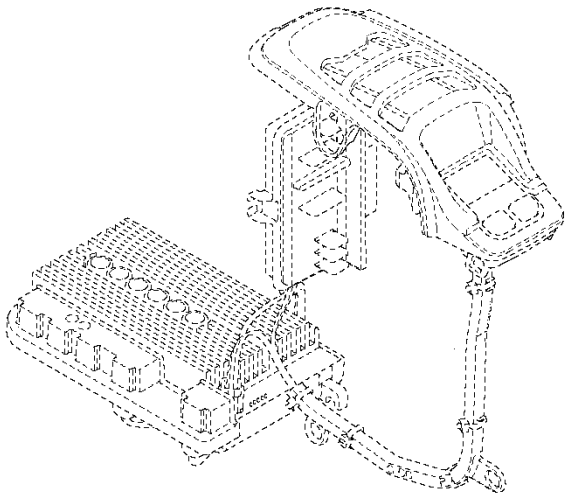

Ref	Part No	Description	Remark	QTY KIT
1	597 79 36-01	COVER		1
2	596 93 48-01	CONTROL UNIT		1
3	525 75 51-07	SCREW ITXSCFM		5
4	580 29 29-01	SCREW ITXSCT		1
5	597 75 06-01	WIRING ASSY		1
6	598 86 71-01	CONTROL PANEL	With Bluetooth	1
6	598 87 29-01	CONTROL PANEL	Without Bluetooth	1

KEES VAN DER SPEK
TUINMACHINES ★ STOLWIJK

G K 1 PACE ACCESSORIES

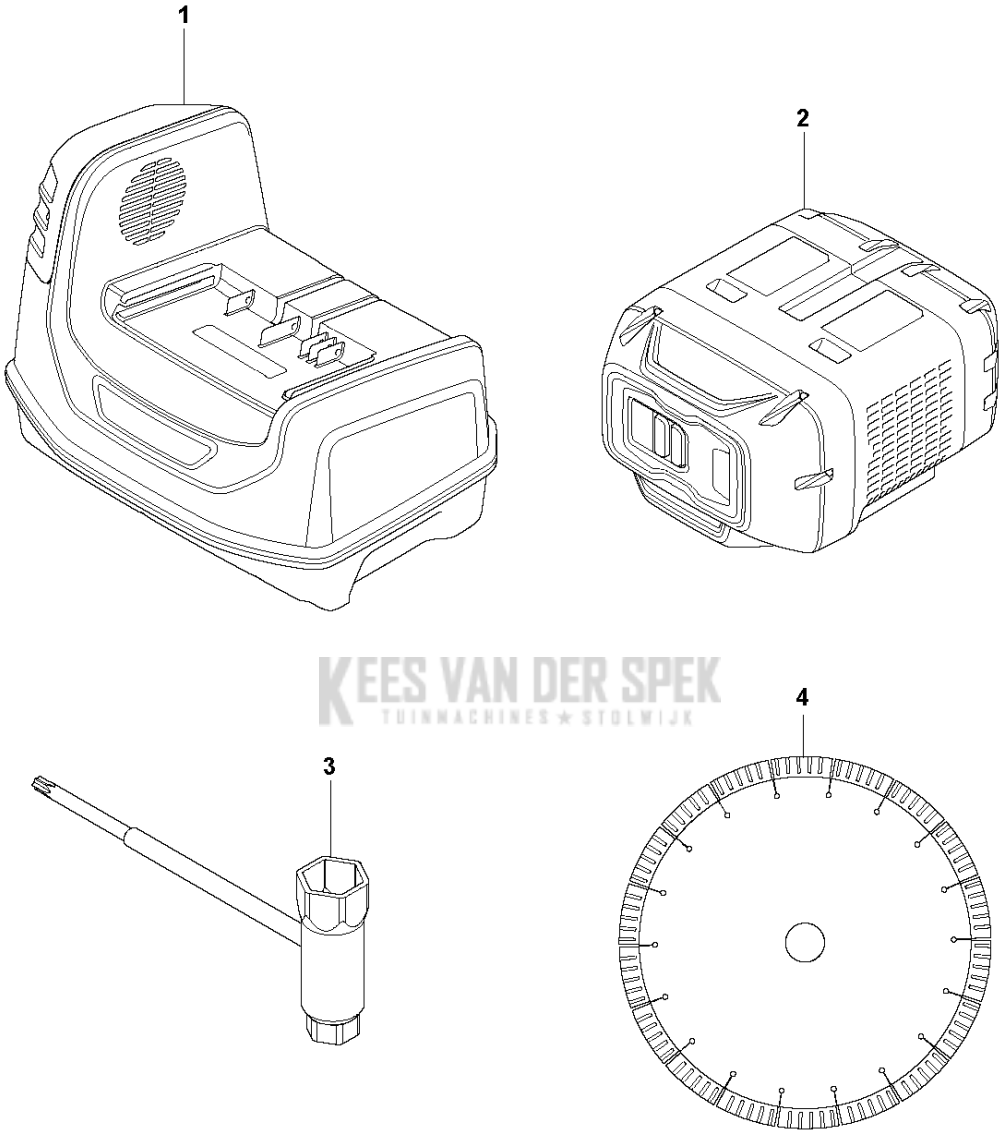

KEES VAN DER SPEK
TUINMACHINES ★ STOLWIJK

Ref	Part No	Description	Remark	QTY KIT
1	970 49 50-01	BATTERY CHARGER	EU	1
1	970 49 50-03	BATTERY CHARGER	US	1
1	970 49 50-04	BATTERY CHARGER	JP	1
1	970 49 50-05	BATTERY CHARGER	AY/NZ/AR	1
1	970 49 50-06	BATTERY CHARGER	SZ	1
1	970 49 50-02	BATTERY CHARGER	UK	1
1	970 49 51-01	BATTERY CHARGER	EU	1
1	970 49 51-03	BATTERY CHARGER	US	1
1	970 49 51-04	BATTERY CHARGER	JP	1
1	970 49 51-05	BATTERY CHARGER	AU/NZ/AR	1
1	970 49 51-06	BATTERY CHARGER	SZ	1
1	970 49 51-02	BATTERY CHARGER	UK	1
2	970 49 42-01	BATTERY	With Bluetooth EU, AU, NZ, JP	1
2	970 49 41-01	BATTERY	With Bluetooth - EU, AU, NZ, JP	1
2	970 49 43-01	BATTERY	Without Bluetooth - RoW	1
2	970 49 42-02	BATTERY	With Bluetooth - US	1
2	970 49 40-01	BATTERY	Without Bluetooth - RoW	1
2	970 49 41-02	BATTERY	With Bluetooth - US	1
3	506 38 26-01	TOOL		1
4	504 00 05-03	ABRASIVE DISC	Vari-Disc Abrasive 14"	1
4	574 85 40-01	DIAMOND BLADE	Vari-Cut FR3 14"	1
4	574 85 39-01	DIAMOND BLADE	Vari-Cut FR3 12"	1
4	504 00 04-03	ABRASIVE DISC	Vari-Disc Abrasive 12"	1
4	598 71 49-01	DIAMOND BLADE	Tacti-Cut 12"	1
4	598 71 50-01	DIAMOND BLADE	Elite-Cut 12"	1
4	529 66 40-01	DIAMOND BLADE	Elite-Cut 14"	1
4	529 66 39-01	DIAMOND BLADE	Tacti-Cut 14"	1

KEES VAN DER SPEK
TUINMACHINES ★ STOLWIJK

H K 1 PACE DECALS

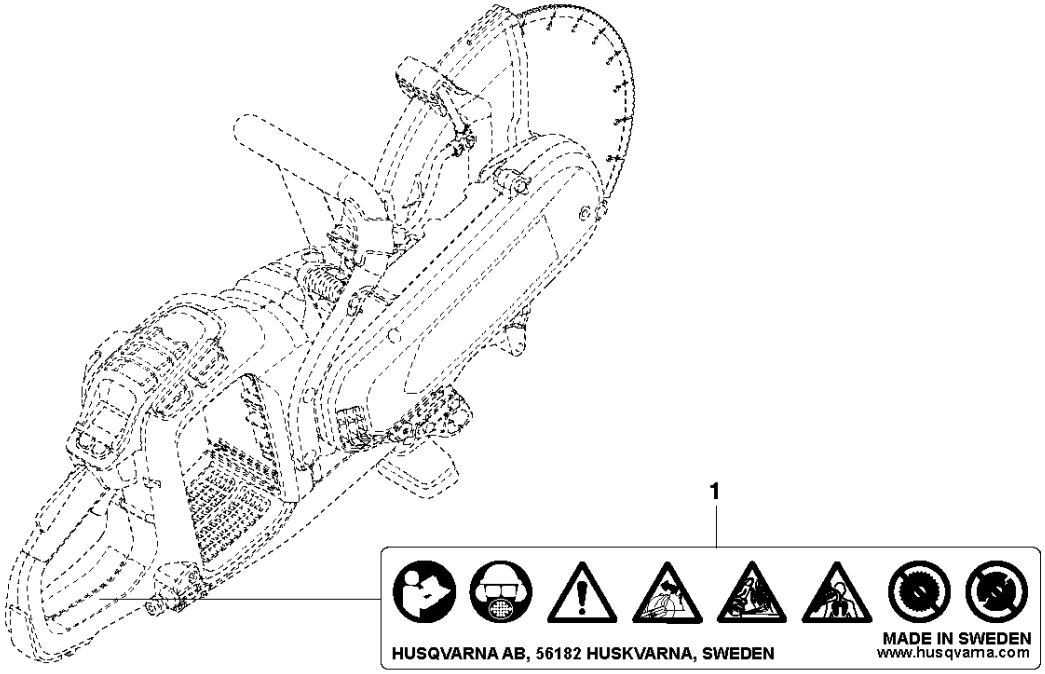

KEES VAN DER SPEK
TUINMACHINES ★ STOLWIJK

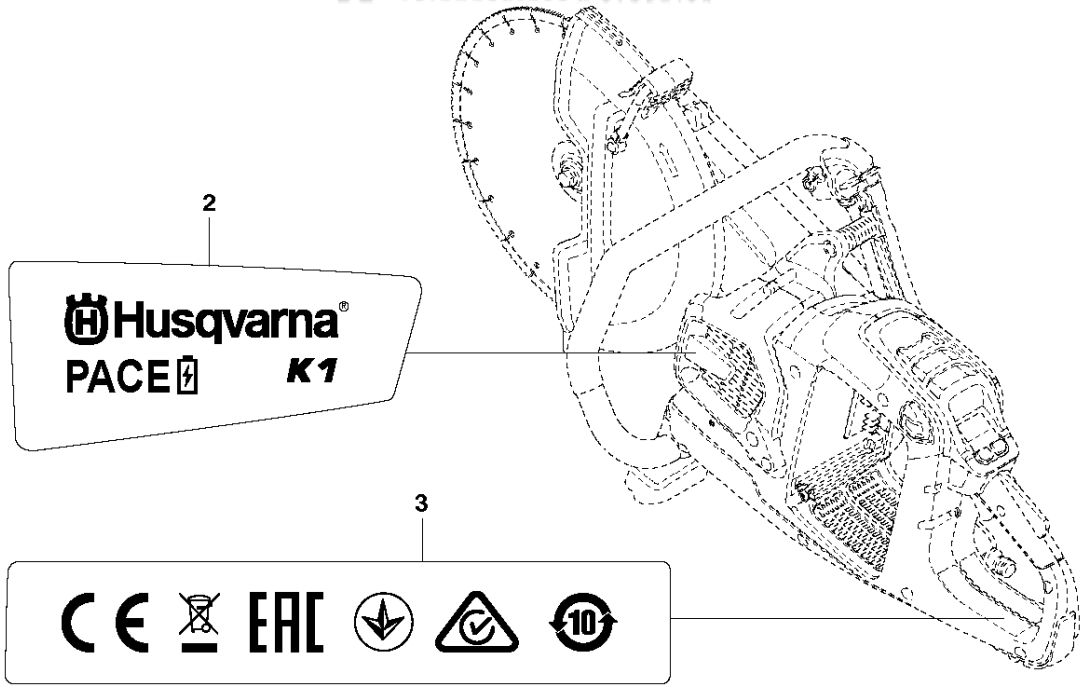

Ref	Part No	Description	Remark	QTY KIT
1	597 79 27-01	DECAL		1
2	597 79 24-01	DECAL		1
3	597 79 26-01	DECAL		1

KEES VAN DER SPEK
TUINMACHINES ★ STOLWIJK