SPARE PARTS CATALOGUE

: HUSQVARNA 340I

KEES VAN DER SPEK
TUINMACHINES ★ STOLWIJK

Spare Parts List

SPARE PARTS LIST

KEES VAN DER SPEK

A 340i CHASSIS

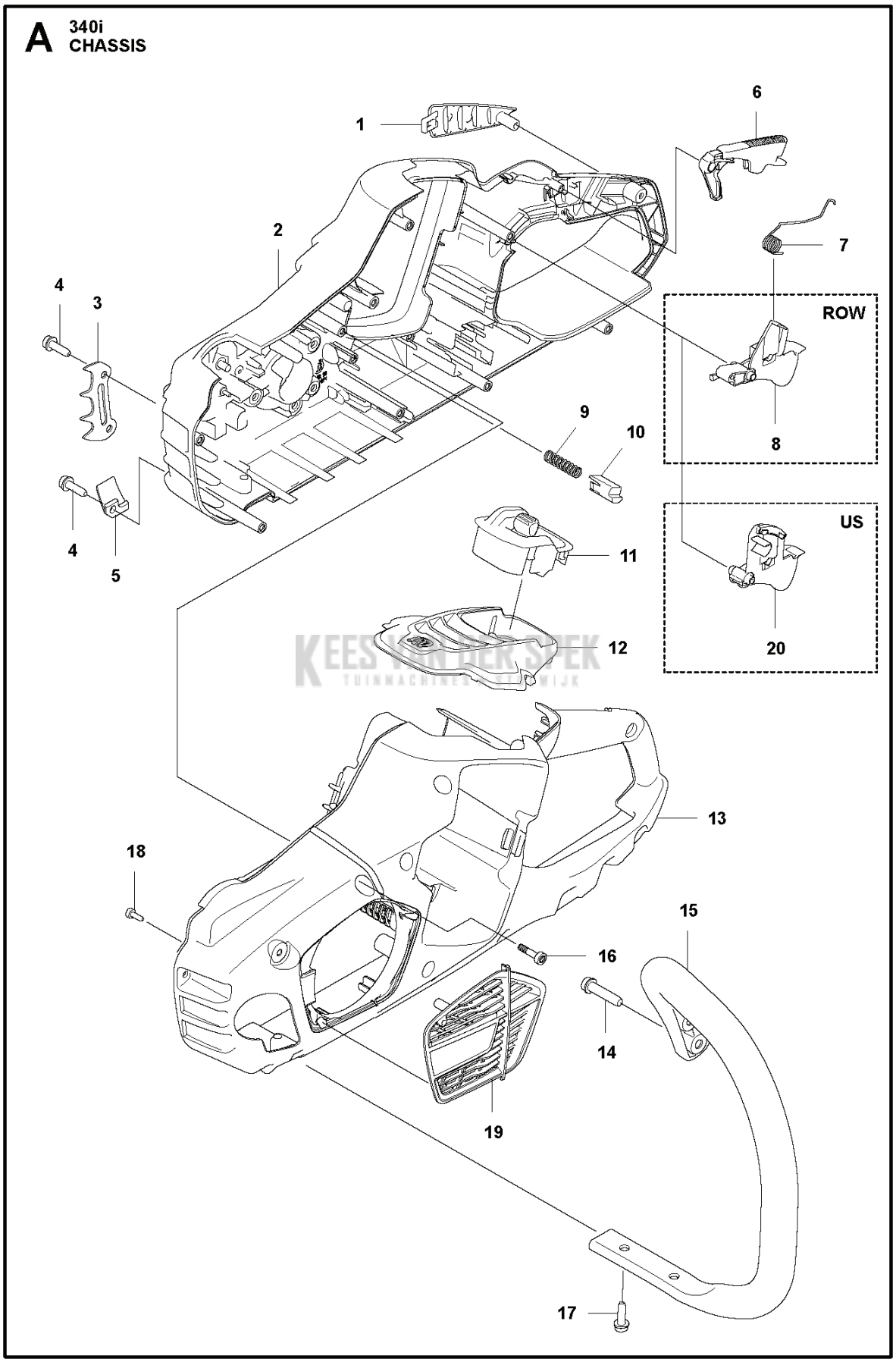

KEES VAN DER SPEK
TUINMACHINES WIJK

PXM_REF	PXM_ PARTNO	DESCRIPTION	PXM_REMARK	QTY.
1	596799201	HANDGREEPINZETSTUK		1
2	595894801	CHASSIS	Clutch Side	1
3	577286601	SPIKE	Inner	1
4	573925801	SCREW ITXSCFT		2
5	505288501	KETTINGVANGER		1
6	589273901	GASVERGRENDELING		1
7	593064201	VEER		1
8	595834001	THROTTLE TRIGGER	For Digital User Interface variant	1
9	585480001	VEER		1
10	577996601	DRUKKNOP		1
12	595937201	DEKSEL	Air Outlet 340i	1
13	595311301	CHASSIS	Flywheel side	1
14	525798103	SCREW ITXSCFT		2
15	595535401	VOORSTE BEUGEL		1
16	580292901	SCREW ITXSCT		10
17	525798101	SCREW ITXSCFT		2
18	526221801	SCREW CITXPANT		3
19	595893301	LUCHTINLAAT		1
20	596080201	THROTTLE TRIGGER	For Mechanical User Interface variant	1

KEES VAN DER SPEK
TUINMACHINES ★ STOLWIJK

B1 340i CLUTCH COVER

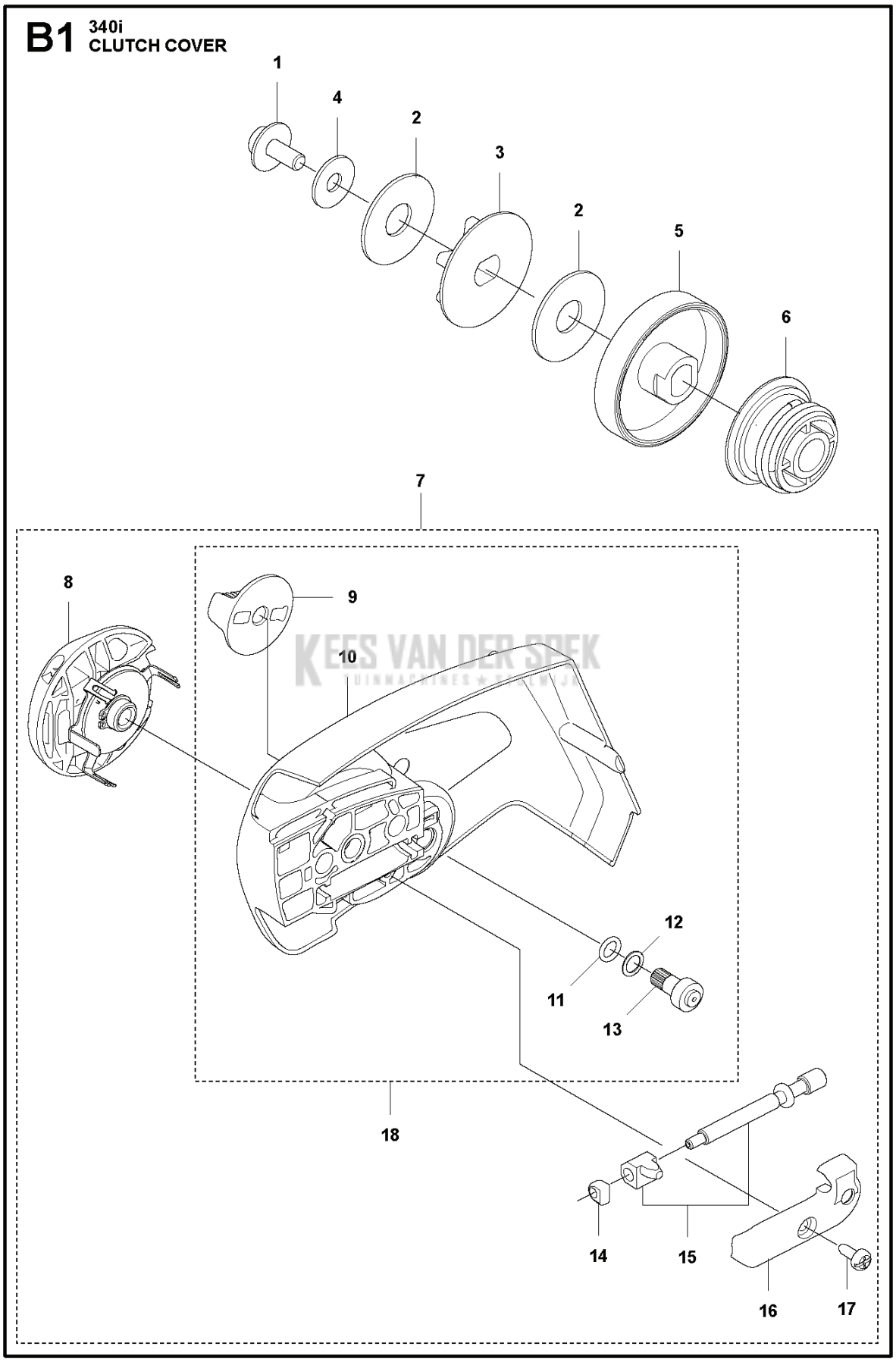

KEES VAN DER SPEK TUINMACHINES

PXM_REF	PXM_ PARTNO	DESCRIPTION	PXM_REMARK	QTY.
1	525755105	SCHROEF ITXSCFM		1
2	597670101	SCHIJF VEER		2
3	590087701	KETTINGTANDWIEL	3/8"mini - 6T	1
4	503230035	RING		1
5	593684401	REMTROMMEL		1
6	595342201	POMP RONDSEL	Assy	1
7	595314801	KOPPELINGSKAP COMPL.	Assy	1
8	595310201	KNOB ASSY		1
9	595839101	KETTINGSPANNER		1
10	595845601	KOPPELINGSKAP		1
11	740480702	O-RING		1
12	503230063	RING		1
13	596514101	WORMWIEL		1
14	537017401	LAGERHULS		1
15	596335801	KETTINGSPANNER	Assy	1
16	595842701	DEKSEL		1
17	526221801	SCREW CITXPANT		1
18	599589401	KOPPELINGSKAP COMPL.	Chain tensioner included	1

KEES VAN DER SPEK
TUINMACHINES ★ STOLWIJK

B2 340i
CLUTCH COVER

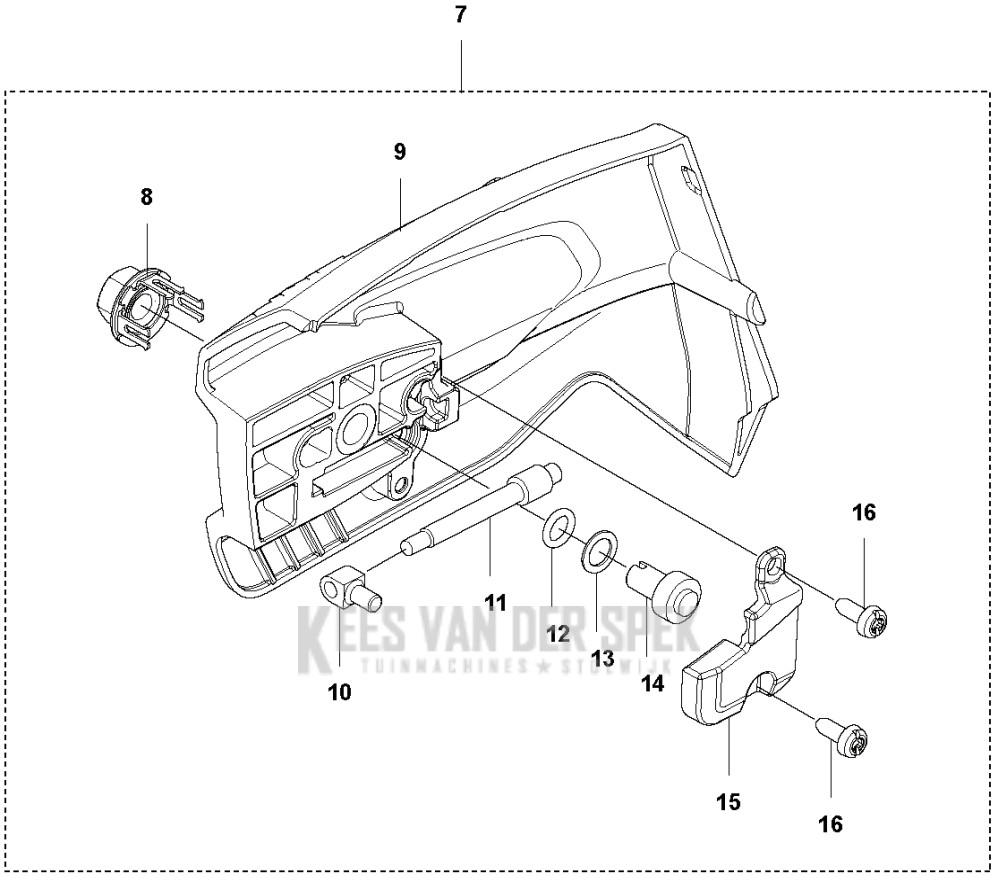

KEES VAN DER SPEK
TUINMACHINES ★ STOMWIJK

PXM_REF	PXM_ PARTNO	DESCRIPTION	PXM_REMARK	QTY.
7	593052002	KOPPELINGSKAP COMPL.		1
8	505197301	MOER	Retainer Assy	1
9	593051702	KOPPELINGSKAP		1
10	588850301	PEN		2
11	537397001	WORMSCHROEF		1
12	740480702	O-RING		2
13	503230063	RING		1
14	599724101	WORMWIEL		1
15	505214501	DEKSEL	Chain Tensioner	1
16	526221801	SCREW CITXPANT		2

KEES VAN DER SPEK
TUINMACHINES ★ STOLWIJK

C 340i
CHAIN BRAKE

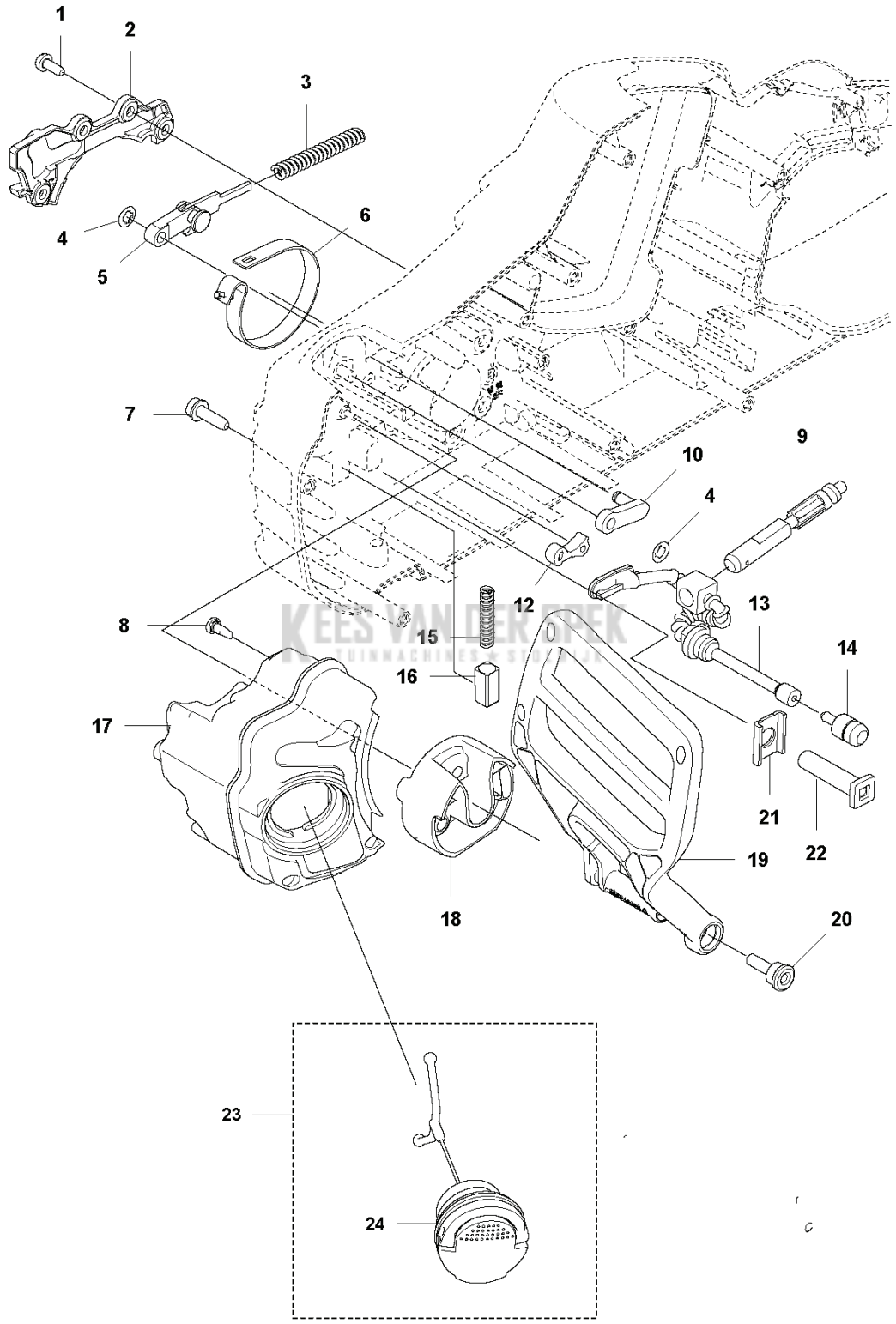

KEES VAN DER EEK
TUINMACHINES STORE

PXM_REF	PXM_ PARTNO	DESCRIPTION	PXM_REMARK	QTY.
1	526221801	SCREW CITXPANT		4
2	593641601	DEKSEL	Brake	1
3	595026101	REMVEER		1
4	596302401	RING	Locking	2
5	599231901	KNIEGEWRICHT COMPL.		1
6	585590301	REMBAND		1
7	573925801	SCREW ITXSCFT		1
8	573925801	SCREW ITXSCFT		7
9	540057901	POMPZUIGER		1
10	593722301	AANDRIJFSTANG	Knee Joint	1
12	505201201	VERGRENDELING		1
13	594954001	OLIESLANG		1
14	503967501	OLIELOOD		1
15	503436501	POSITIEVEER		1
16	537210701	VEERGELEIDING		1
17	593015101	OLIETANK	Assy	1
18	594919801	HANDBESCHERMING		1
19	594919601	HANDBESCHERMING		1
20	580284201	SCREW		1
21	596971101	PLAAT		1
22	505217301	ZAAGBLADBOUT		1
23	522620003	TANKDEKSEL COMPL.		1
24	589241101	PAKKING		1

KEES VAN DER SPEK
TUINMACHINES ★ STOLWIJK

D 340i ELECTRIC

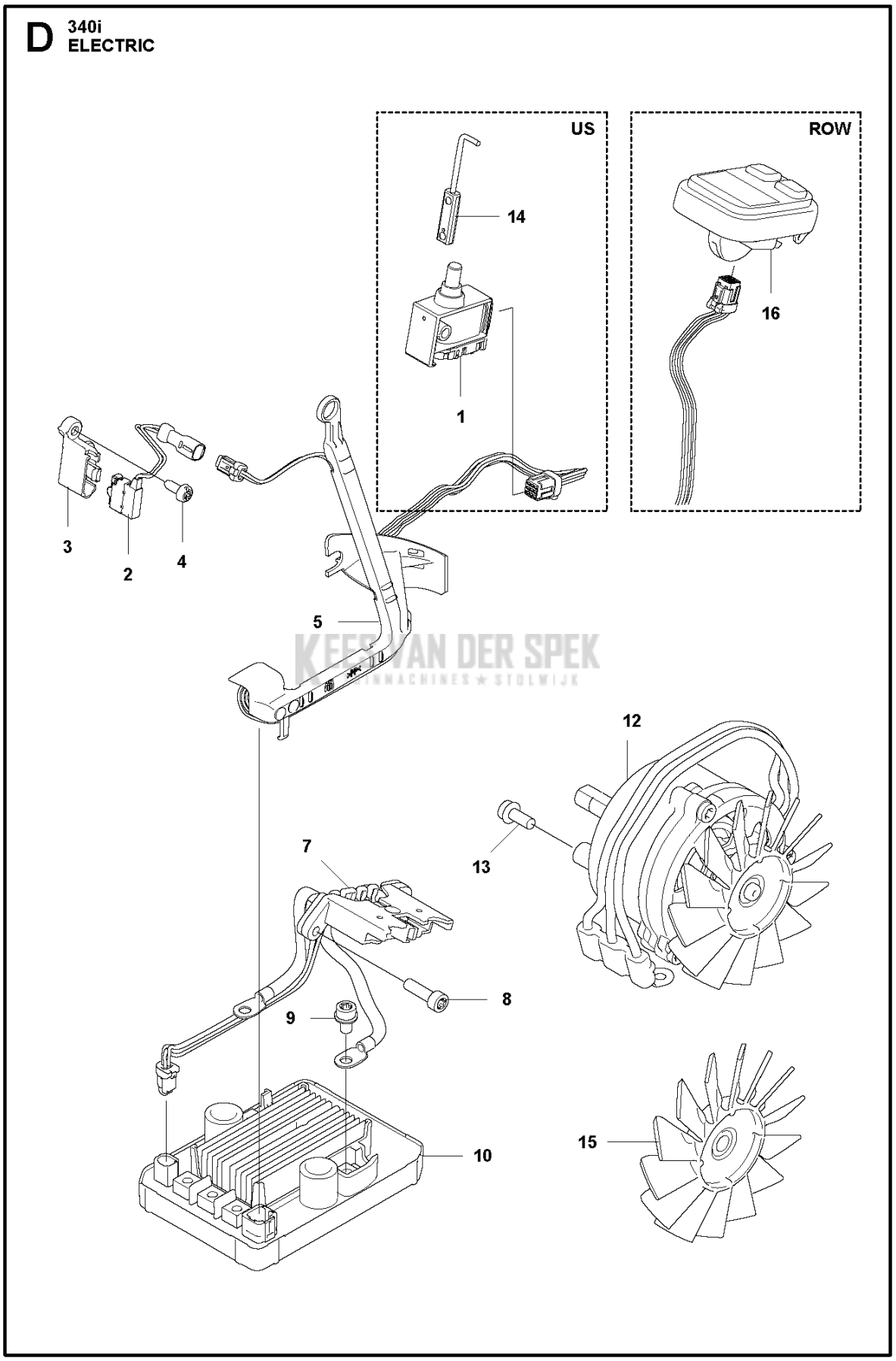

KEES VAN DER SPEK
TUINMACHINES ★ STOLWIJK

PXM_REF	PXM_ PARTNO	DESCRIPTION	PXM_REMARK	QTY.
1	582050701	SCHAKELAAR	For Mechanical User Interface variant	1
2	593954101	MICRO SCHAKELAAR		1
3	596627701	BEVESTIGING		1
4	526221801	SCREW CITXPANT		2
5	596943001	BEKABELING COMPL.	For Mechanical User Interface variant	1
5	596786701	BEKABELING COMPL.	For Digital User Interface variant	1
7	593083801	BEKABELING COMPL.		1
8	580292901	SCREW ITXSCT		2
9	525755107	SCHROEF ITXSCFM		5
10	599138701	BESTURINGSEENHEID	For Mechanical User Interface variant	1
10	599138602	BESTURINGSEENHEID		1
12	598402301	MOTOR COMPL.	For Digital User Interface variant, 1800W, 36V, BLDC, 3 PHASES	1
12	598402401	MOTOR COMPL.	For Mechanical User Interface variant	1
13	525755105	SCHROEF ITXSCFM		3
14	577855101	THROTTLE ROD ASSY	For Mechanical User Interface variant	1
15	593782601	VENTILATOR		1
16	593914901	CONTROLE PANEEL	For Digital User Interface variant	1

KEES VAN DER SPEK
TUINMACHINES ★ STOLWIJK