SPARE PARTS CATALOGUE

CULTIVATORS/TILLERS: HUSQVARNA TR 348

KEES VAN DER SPEK
TUINMACHINES ★ STOLWIJK

Spare Parts List

SPARE PARTS LIST

CULTIVATORS/TILLERS

HUSQVARNA TR 348

KESTWORKSPK
TUINMACHINES ★ STOLWIJK

CLUTCH

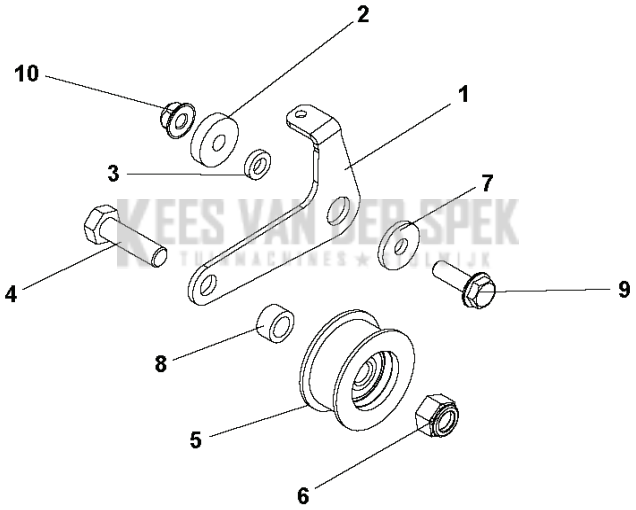

KEES VAN DER SPEK
TUINMACHINES ★ ZEVENHUIZEN

PXM_REF	PXM_ PARTNO	DESCRIPTION	PXM_REMARK	QTY.
1	598677001	VERSNELLING		1
2	598680201	AFSTANDRING		1
3	577520401	AFSTANDRING		1
4	519653455	SCREW		1
5	519653457	POELIE		1
6	519653458	MOER		1
7	580538001	RING		1
8	590519501	AFSTANDRING		1
9	573942501	BOUT		1
10	586721001	MOER		1

KEES VAN DER SPEK
TUINMACHINES ★ STOLWIJK

COVER

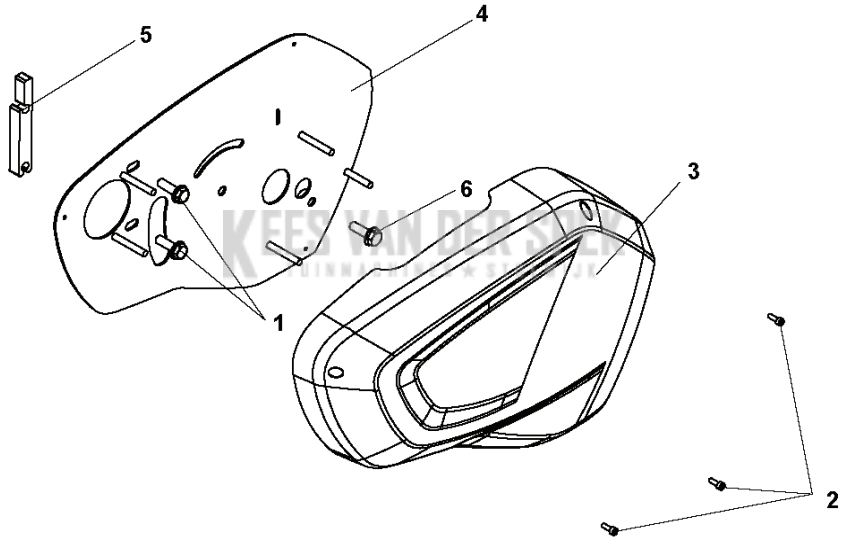

KEES VAN DER SLUIS
TRAINING & SUPPORT

PXM_REF	PXM_ PARTNO	DESCRIPTION	PXM_REMARK	QTY.
1	573942501	BOUT		2
2	590161001	SCREW		3
3	590161201	DEKSEL		1
4	598680601	DEKSEL		1
5	598676601	DEKSEL		1
6	598675301	SCREW		1

KEES VAN DER SPEK
TUINMACHINES ★ STOLWIJK

ENGINE

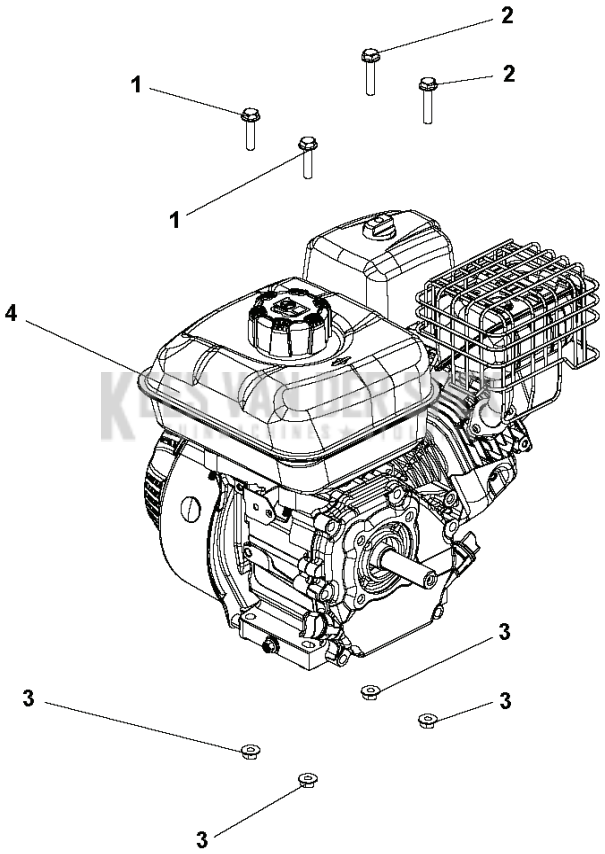

PXM_REF	PXM_ PARTNO	DESCRIPTION	PXM_REMARK	QTY.
1	544207301	SCREW		2
2	519653413	SCREW		2
3	519653430	MOER		4
4	598676001	MOTOR	Complete engine assy: B&S CR950 (NOT available for sale)	1

KEES VAN DER SPEK
TUINMACHINES ★ STOLWIJK

COUNTERWEIGHT

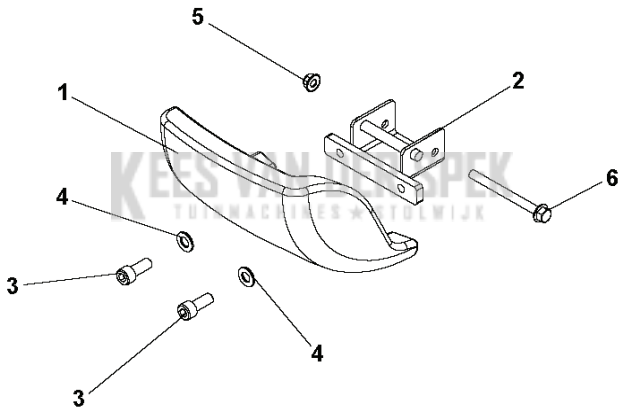

PXM_REF	PXM_ PARTNO	DESCRIPTION	PXM_REMARK	QTY.
1	598679001	GEWICHT		1
2	598676501	TEGENGEWICHT		1
3	587094001	SCHROEF IHSCM		2
4	501992401	RING		2
5	586721001	MOER		1
6	598675501	SCREW		1

KEES VAN DER SPEK
TUINMACHINES ★ STOLWIJK

HANDLE

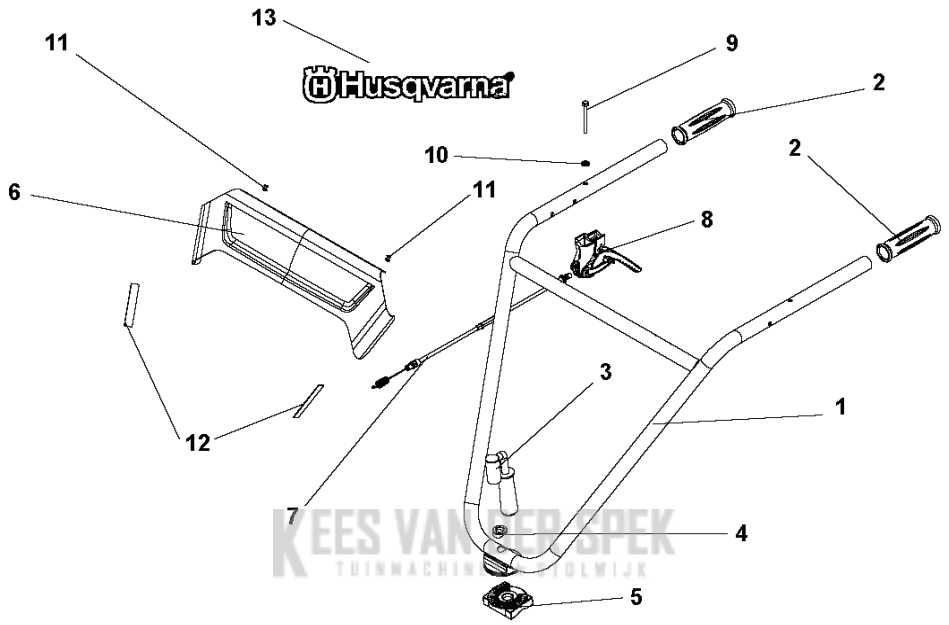

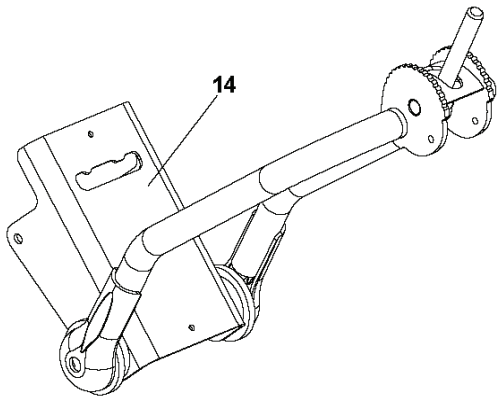

PXM_REF	PXM_ PARTNO	DESCRIPTION	PXM_REMARK	QTY.
1	590362001	STUUR		1
2	519000113	HENDEL		2
3	590215801	HEFBOOM		1
4	519653414	AFSTANDRING		1
5	519653415	AFSTANDRING		1
6	590216101	PANEEL		1
7	598676401	KABEL		1
8	577463601	HEFBOOM		1
9	519653113	SCREW		1
10	531009403	RING		1
11	590216201	KLINKNAGEL		2
12	590216301	STICKER		2
13	590171801	STICKER		1
14	598677901	BEVESTIGING		1

KEES VAN DER SPEK
TUINMACHINES ★ STOLWIJK

SUPPORT LEGS

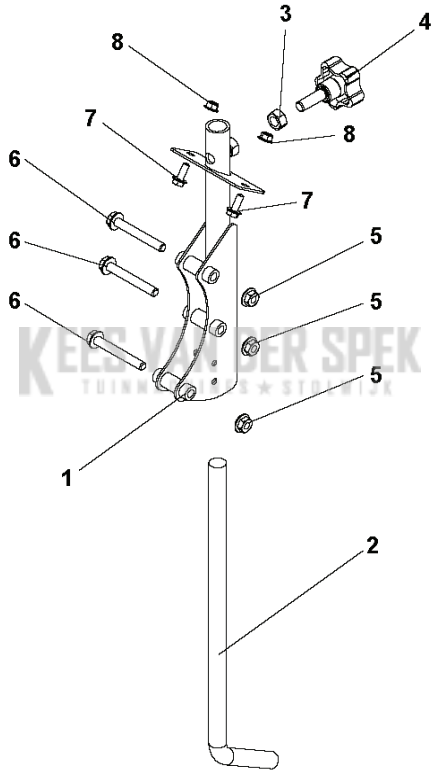

KEES VAN DER SPEK
TUINMACHINES ★ STOMPWIJK

PXM_REF	PXM_ PARTNO	DESCRIPTION	PXM_REMARK	QTY.
1	598680501	STEUN		1
2	544309301	PENNEN		1
3	519653456	MOER		1
4	598678101	KNOP		1
5	519653430	MOER		3
6	573943101	BOUT		3
7	519653435	SCREW		2
8	598675701	TBD		2

KEES VAN DER SPEK
TUINMACHINES ★ STOLWIJK

THROTTLE CONTROLS

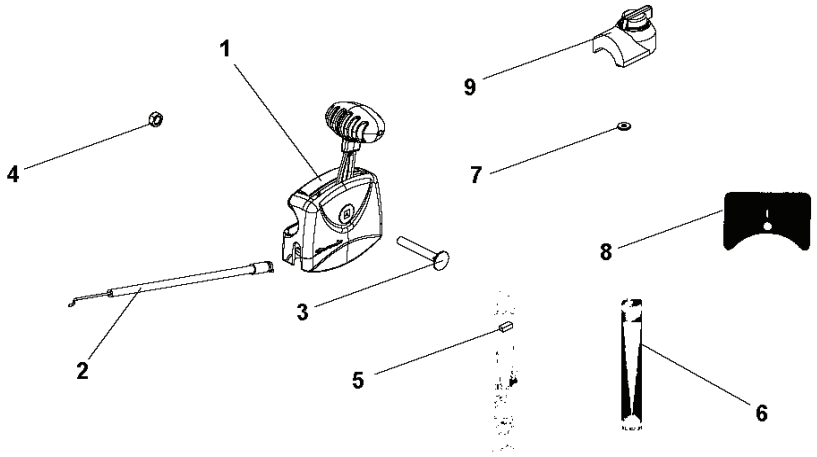

KEES VAN DER SPEK
TUINMACHINES ★ STOLWIJK

PXM_REF	PXM_ PARTNO	DESCRIPTION	PXM_REMARK	QTY.
1	577453001	GASHEFBOOM		1
2	577453101	GASKABEL		1
3	577453801	SCREW		1
4	732261601	MOER		1
5	519646680	STICKER		1
6	531008251	STICKER		1
7	531008539	RING		1
8	501963701	PLAATJE		1
9	531008558	STOPSCHAKELAAR		1

KEES VAN DER SPEK
TUINMACHINES ★ STOLWIJK

TINE ASSEMBLY

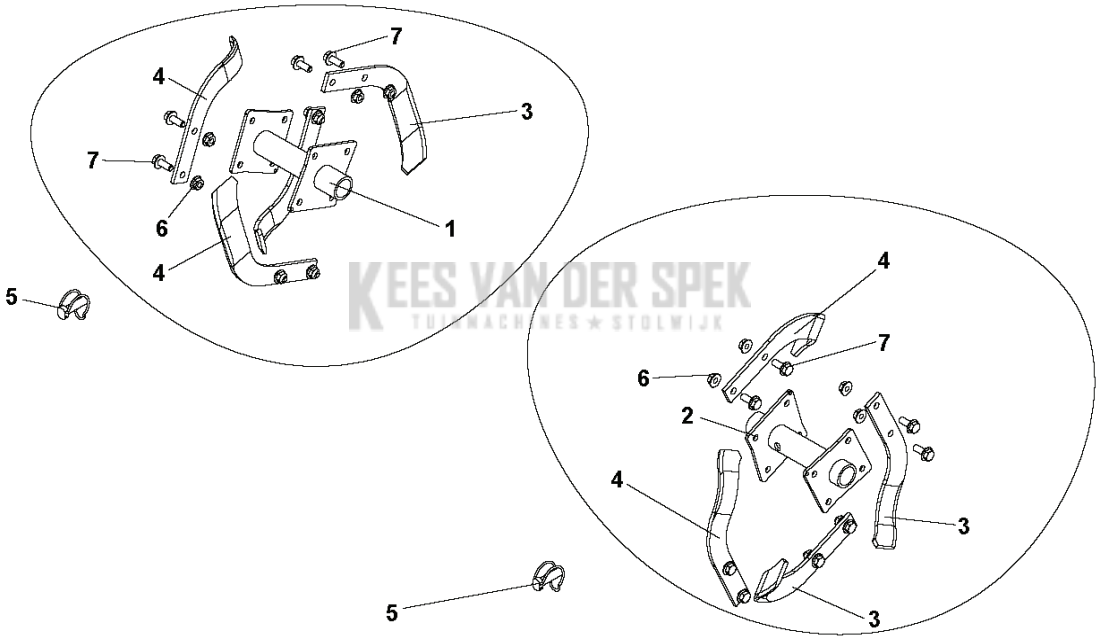

KEES VAN DER SPEK
TUINMACHINES ★ STOLWIJK

PXM_REF	PXM_ PARTNO	DESCRIPTION	PXM_REMARK	QTY.
1	598678901	MES		1
2	598678801	MES		1
3	598678201	MES		4
4	598678401	MES		4
5	577453601	KLEM		2
6	519653430	MOER		16
7	519653433	BOUT		16

KEES VAN DER SPEK
TUINMACHINES ★ STOLWIJK

TINE SHIELD

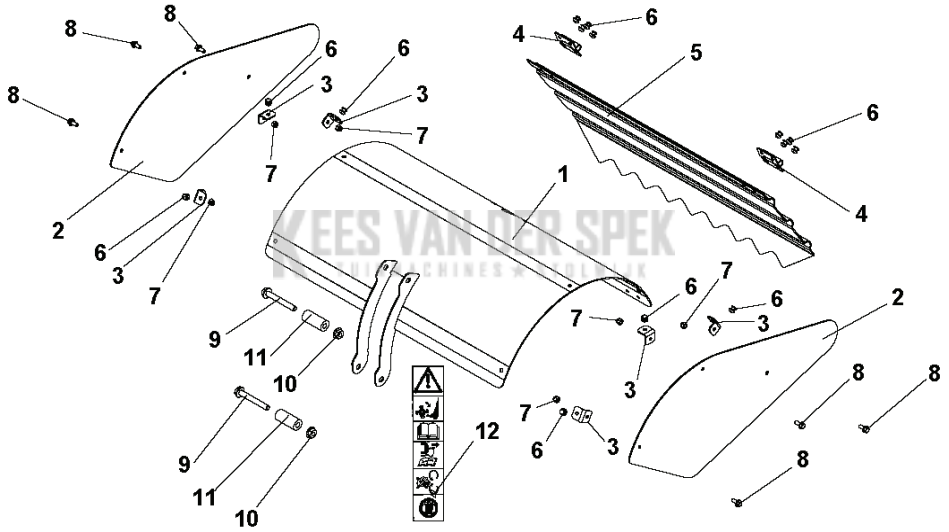

PXM_REF	PXM_ PARTNO	DESCRIPTION	PXM_REMARK	QTY.
1	598680801	DEKSEL		1
2	598680901	DEKSEL		2
3	598680701	DEKSEL		6
4	598678001	SCHARNIER		2
5	598681101	DEKSEL		1
6	598678601	KLINKNAGEL		14
7	522995701	MOER		6
8	598675401	SCREW		6
9	573943101	BOUT		2
10	519653430	MOER		2
11	598680301	AFSTANDRING		2
12	587995501	STICKER		1

KEES VAN DER SPEK
TUINMACHINES ★ STOLWIJK

TRANSMISSION – 2

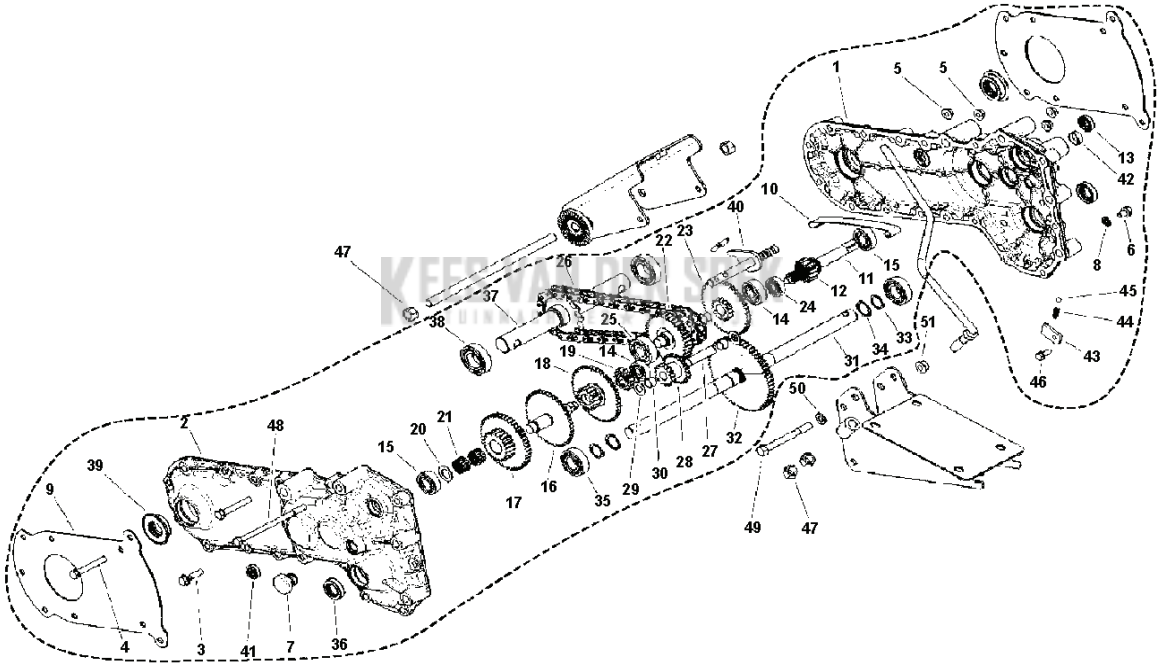

PXM_REF	PXM_ PARTNO	DESCRIPTION	PXM_REMARK	QTY.
1	598676701	MOTORDEKSEL		0
2	598676301	MOTORDEKSEL		0
3	578042001	BOUT		0
4	575361601	SCREW		0
5	519653430	MOER		0
6	544345601	PLUG		0
7	525876501	PLUG		0
8	501994001	AFDICHTING		0
9	598681201	MOTORDEKSEL		0
10	598680401	VEER		0
11	598679601	AS		0
12	598677101	VERSNELLING		0
13	525877001	AFDICHTING		0
14	525880401	KOGELLAGER		0
15	544176901	LAGER		0
16	598679701	AS		0
17	598677601	VERSNELLING		0
18	598677401	VERSNELLING		0
19	598677201	VERSNELLING		0
20	578046901	VOERING		0
21	598679401	NAALDLAGER		0
22	598679801	AS		0
23	598677501	VERSNELLING		0
24	598679301	LAGER		0
25	544361801	KOGELLAGER		0
26	598681801	KETTING		0
27	598679901	AS		0
28	598677301	VERSNELLING		0
29	252877701	TBD		0
30	598676201	BUSHING		0
31	598676801	AS		0
32	598677701	VERSNELLING		0
33	531008403	BORGCLIP		0
34	501996401	RING		0
35	573938801	KOGELLAGER		0
36	573937901	AFDICHTING		0
37	598675901	AS		0
38	544177101	LAGER		0
39	531009475	VERBINDING		0
40	598680001	AS		0
41	531009476	VERBINDING		0
42	544353601	AFDICHTING		0
43	544353401	PLAAT		0
44	544352201	VEER		0
45	544353301	KOGEL		0
46	504052701	SCREW		0
47	501992301	MOER		0
48	578070801	BOUT		0
49	598679501	SCREW		0
50	519653160	RING		0
51	501994101	MOER		0

KEES VAN DER SPEK
TUINMACHINES ASTEROIJK

TRANSMISSION – 1

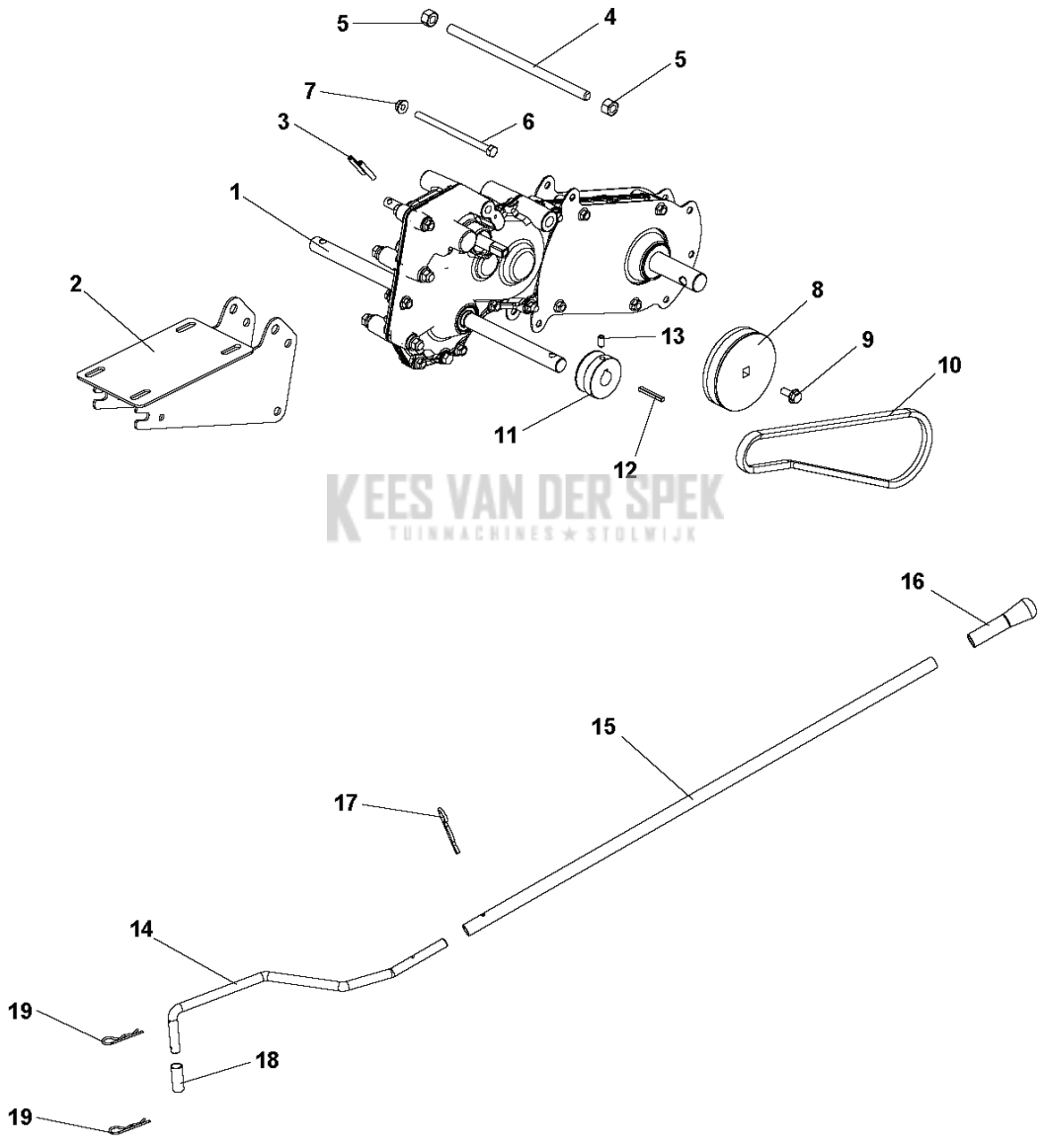

KEES VAN DER SPEK
TUINMACHINES ★ STOLWIJK

PXM_REF	PXM_ PARTNO	DESCRIPTION	PXM_REMARK	QTY.
1	598679201	TRANSMISSIE		1
2	598679101	STEUN		1
3	580537601	PENNEN		2
4	598675801	AS		1
5	501992301	MOER		2
6	598675201	SCREW		1
7	519653430	MOER		1
8	598681301	POELIE		1
9	519653433	BOUT		1
10	598678701	RIEM		1
11	544243901	POELIE		1
12	519653021	SLEUTEL		1
13	728692300	SCREW		1
14	598676901	HEFBOOM		1
15	598677801	HEFBOOM		1
16	544310301	HENDEL		1
17	519653166	RETAINER RING		1
18	598680101	AFSTANDRING		1
19	519651220	PIN RETAINING SCREW		2

KEES VAN DER SPEK
TUINMACHINES ★ STOLWIJK

WHEELS & TIRES

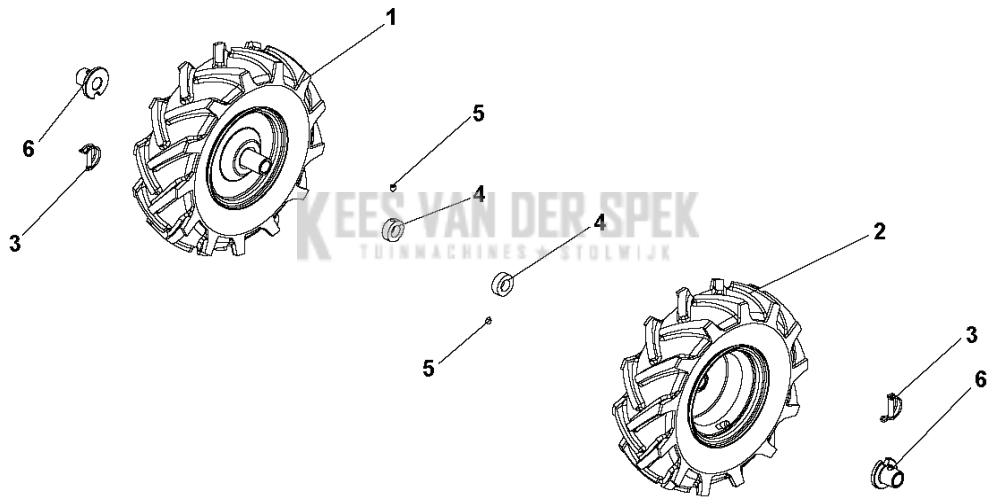

KEES VAN DER SPEK
TUINMACHINES STOLWIJK

PXM_REF	PXM_ PARTNO	DESCRIPTION	PXM_REMARK	QTY.
1	598678501	WIEL		1
2	598678301	WIEL		1
3	519653360	PIN RETAINING SCREW		2
4	598676101	STRUIK		2
5	598675601	SCREW		2
6	598681501	NAAF		2

KEES VAN DER SPEK
TUINMACHINES ★ STOLWIJK