SPARE PARTS CATALOGUE

CULTIVATORS/TILLERS: HUSQVARNA TF 335

KEES VAN DER SPEK
TUINMACHINES ★ STOLWIJK

Spare Parts List

SPARE PARTS LIST

CULTIVATORS/TILLERS

HUSQVARNA TF 335

KESTWORTOSPEK
TUINMACHINES ★ STOLWIJK

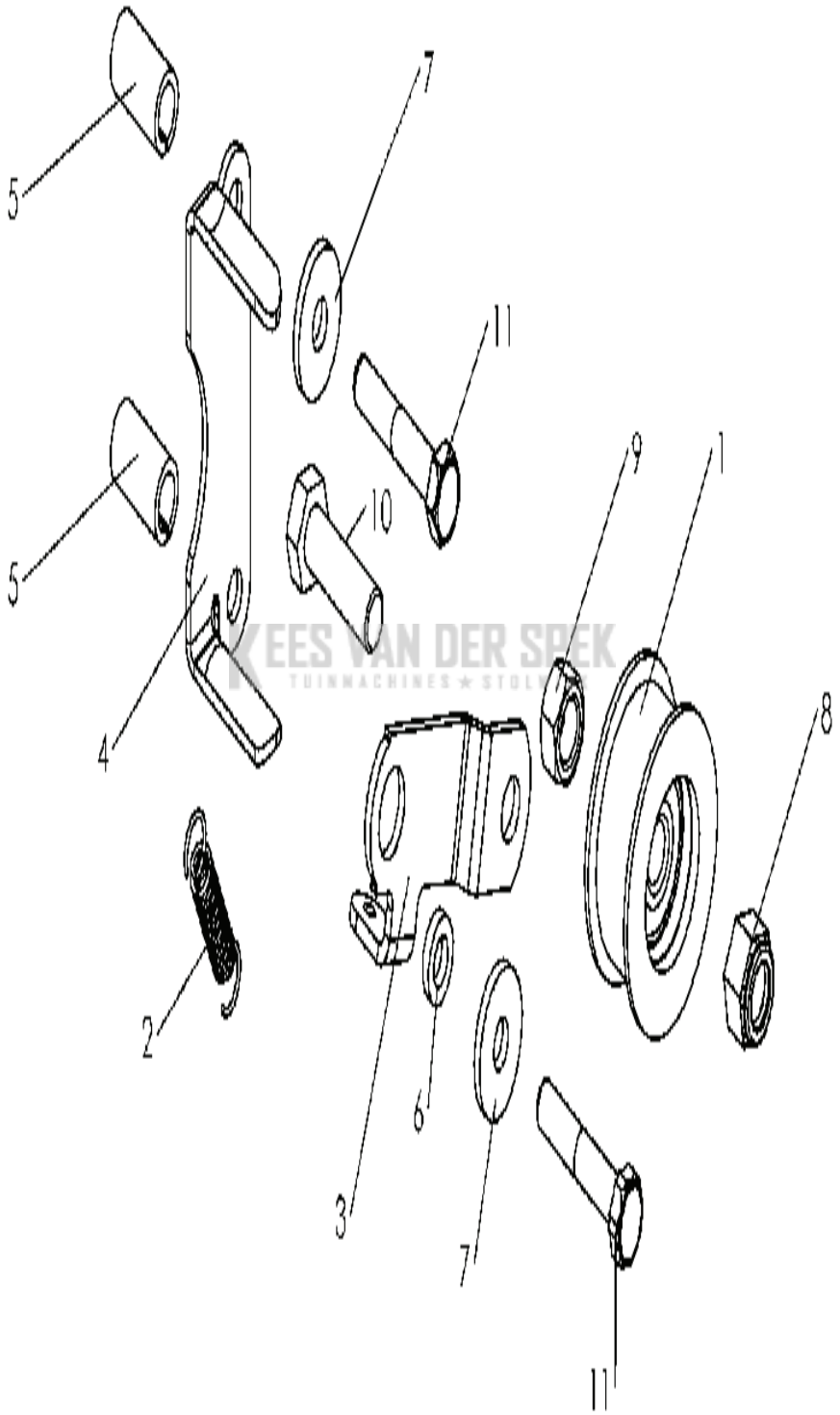

KEES VAN DER SPEK
TUINMACHINES ★ STOLP

PXM_REF	PXM_ PARTNO	DESCRIPTION	PXM_REMARK	QTY.
1	519653457	POELIE	CLUTCH RUNNER	1
2	590214601	VEER	TENSION SPRING	1
3	590214901	PLAAT	CLUTCH LEVER PLATE	1
4	531008577	RIEMGELEIDER	DRIVE BELT ENGINE PULLEY diam. 55	1
5	590215001	AFSTANDRING	SPACER 9X13X25	2
6	577520401	AFSTANDRING	SPACER 14X8X3 Z	1
7	580538001	RING	WASHER 8X24X3	2
8	519653458	MOER	BLOCKING NUT M 10 Z	1
9	519653456	MOER	Nut HM 10 N	1
10	519653455	SCREW	SCREW HM 10X35 Z FST	1
11	590215201	SCREW	"SCREW TH 5/16 UNF LG 1"" 3/4"	2

KEES VAN DER SPEK
TUINMACHINES ★ STOLWIJK

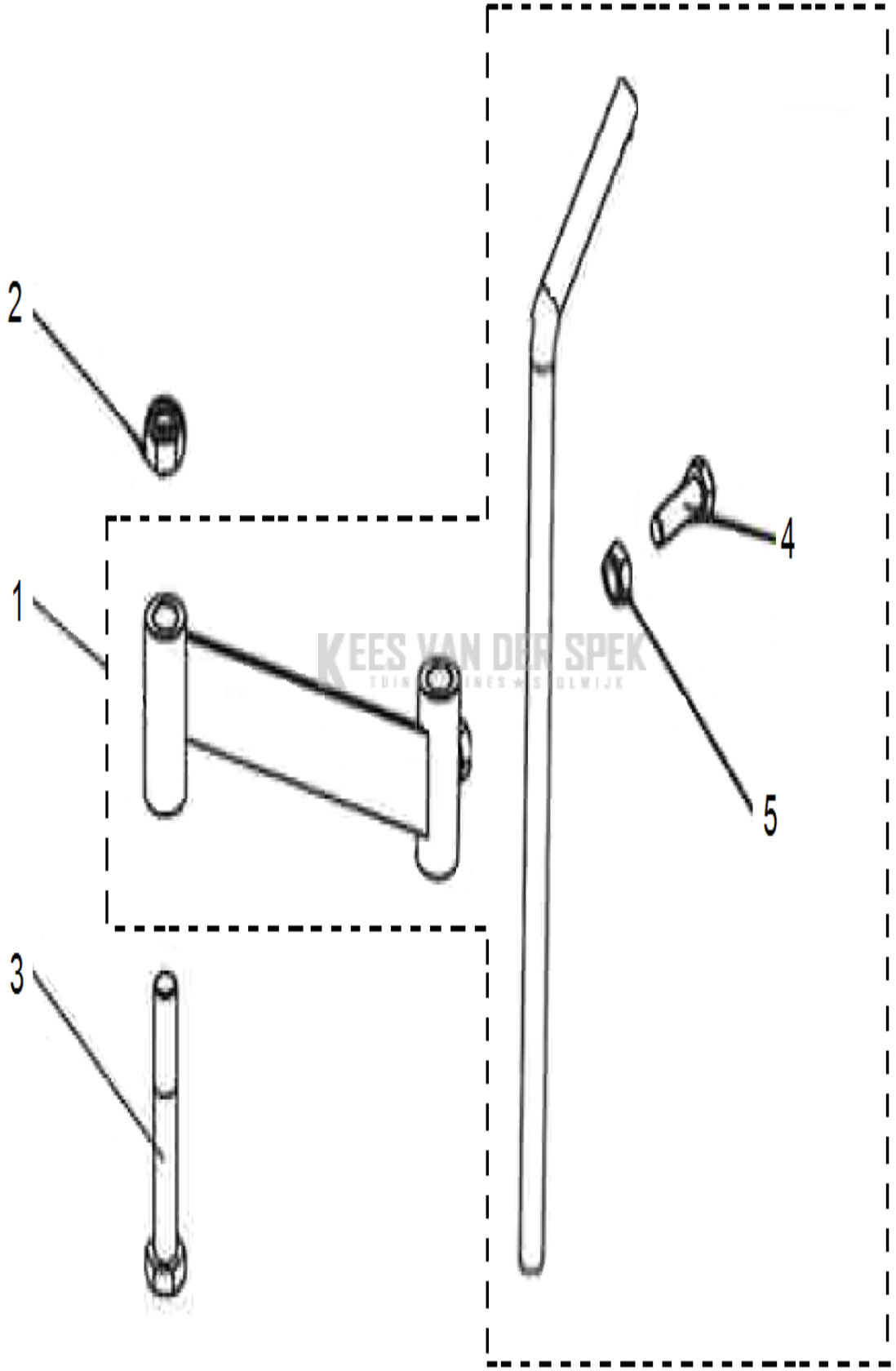
2
1
3
4
5

PXM_REF	PXM_ PARTNO	DESCRIPTION	PXM_REMARK	QTY.
1	597166801	STELLING		1
2	531008578	MOER	BLOCKING NUT M 14 Z	1
3	531008220	BOUT	SCREW H MI 4X90- 34 Z	1
4	544207701	SCREW		1
5	519653456	MOER		1

KEES VAN DER SPEK
TUINMACHINES ★ STOLWIJK

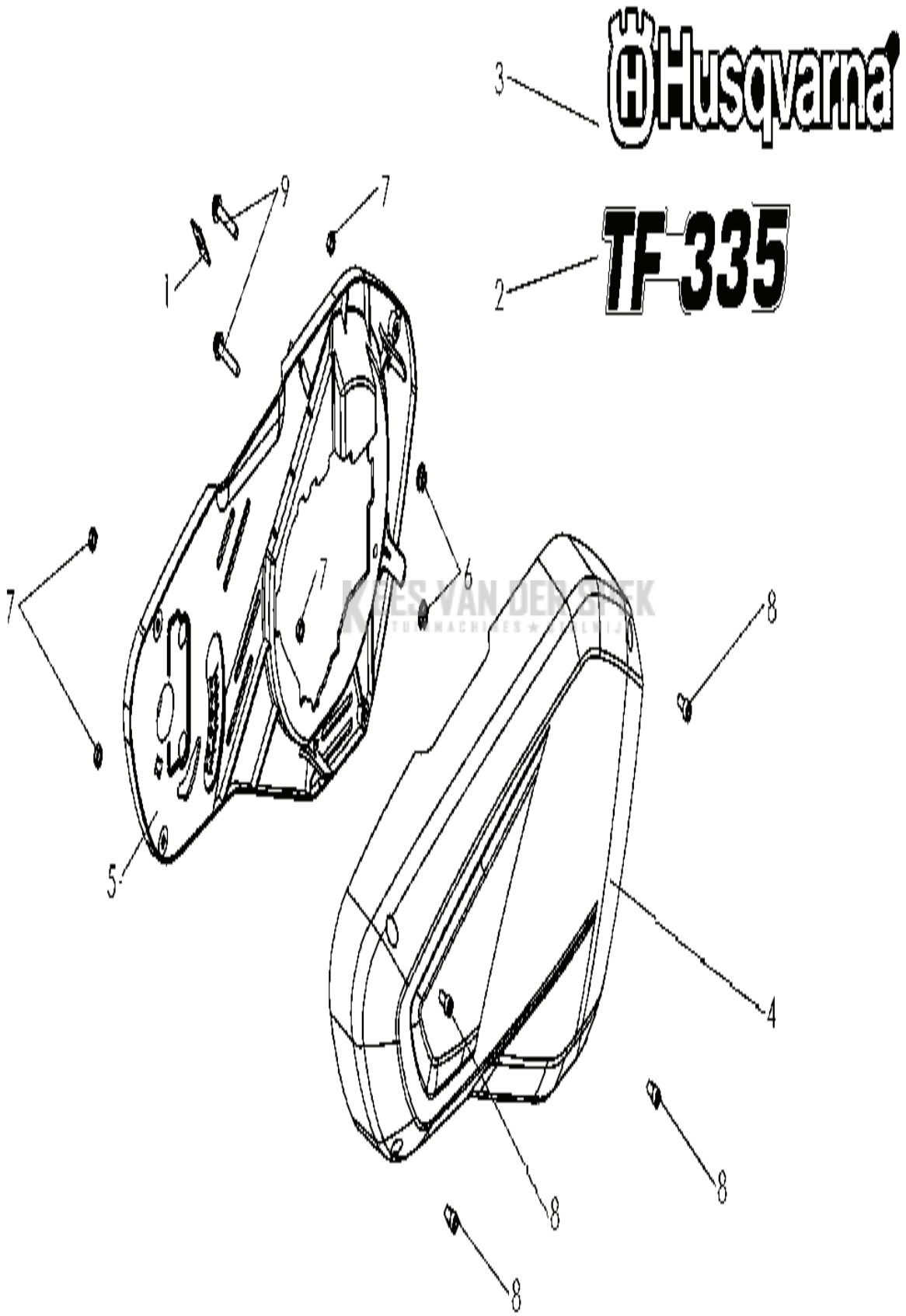
Husqvarna
TF 335
1
2
3
4
5
6
7
8
9

PXM_REF	PXM_ PARTNO	DESCRIPTION	PXM_REMARK	QTY.
1	580322401	SNAPSLUITING	SNAP IN STOP	1
2	590215401	STICKER	STICKER TF335	1
3	590171801	STICKER	STICKER HUSQVARNA	1
4	590171701	DEKSEL	BELT COVER ORANGE	1
5	590215501	BESCHERMING	INSIDE PROTECTOR	1
6	519653432	MOER	NUT H M6 NOTCHED SHOULDER	2
7	732261601	MOER	BLOCKING NUT M 6	4
8	580313501	SCREW	SREW CHC M6X12	4
9	577519001	SCREW	SCREW H 6X35	2

KEES VAN DER SPEK
TUINMACHINES ★ STOLWIJK

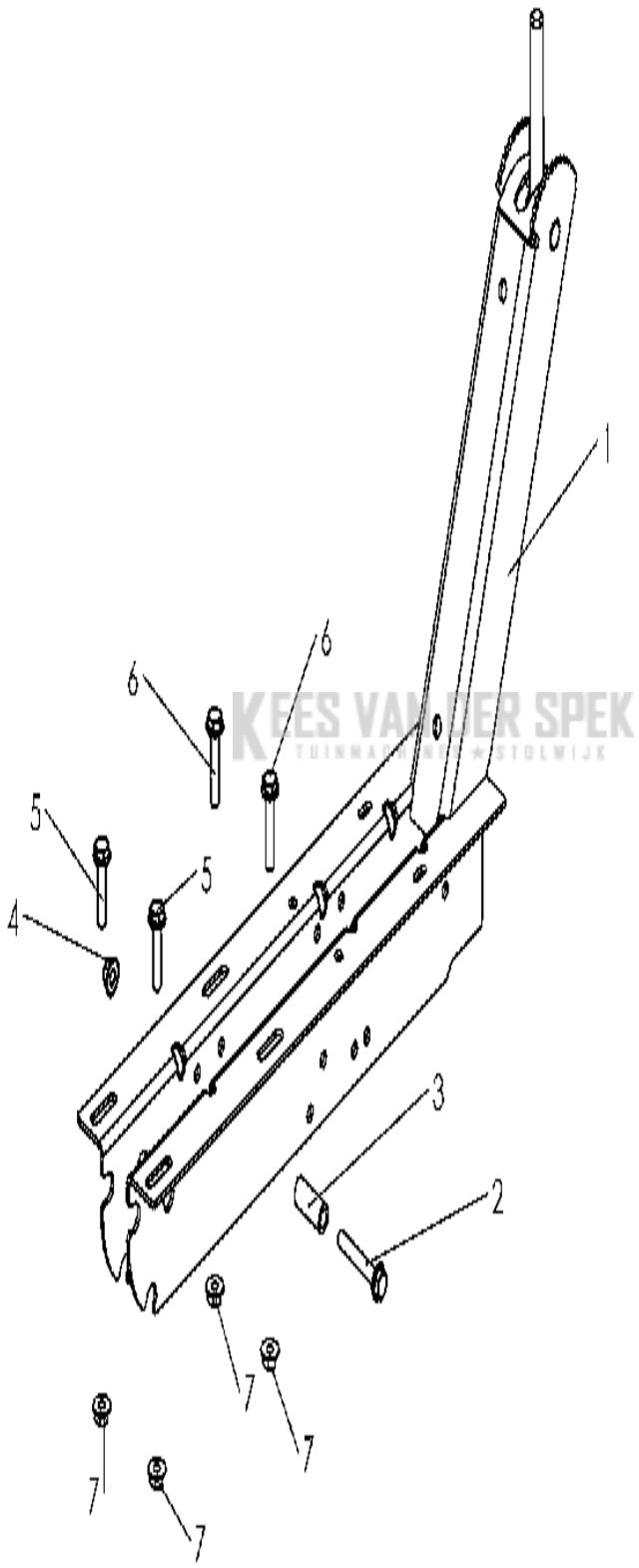

KEES VAN DER SPEK
TUINMACHINES STOLWIJK

PXM_REF	PXM_ PARTNO	DESCRIPTION	PXM_REMARK	QTY.
1	590213101	FRAME	FRAME GREY 627	2
2	575361601	SCREW	SCREW H 8X55 Z NOTCHED SHOULDER	1
3	575361001	AFSTANDRING	SPACER 14X9X35 z	1
4	586721001	MOER	SCREW BDR HM8 SMOOTH BASE	1
5	544207301	SCREW	SCREW H 8x35 Z NOTCHED SHOULDER	2
6	519653413	SCREW	SCREW H M8X40 Z NOTCHED SHOULDER	2
7	519653430	MOER	NUT H M8 Z NOTCHED SHOULDER	4

KEES VAN DER SPEK
TUINMACHINES ★ STOLWIJK

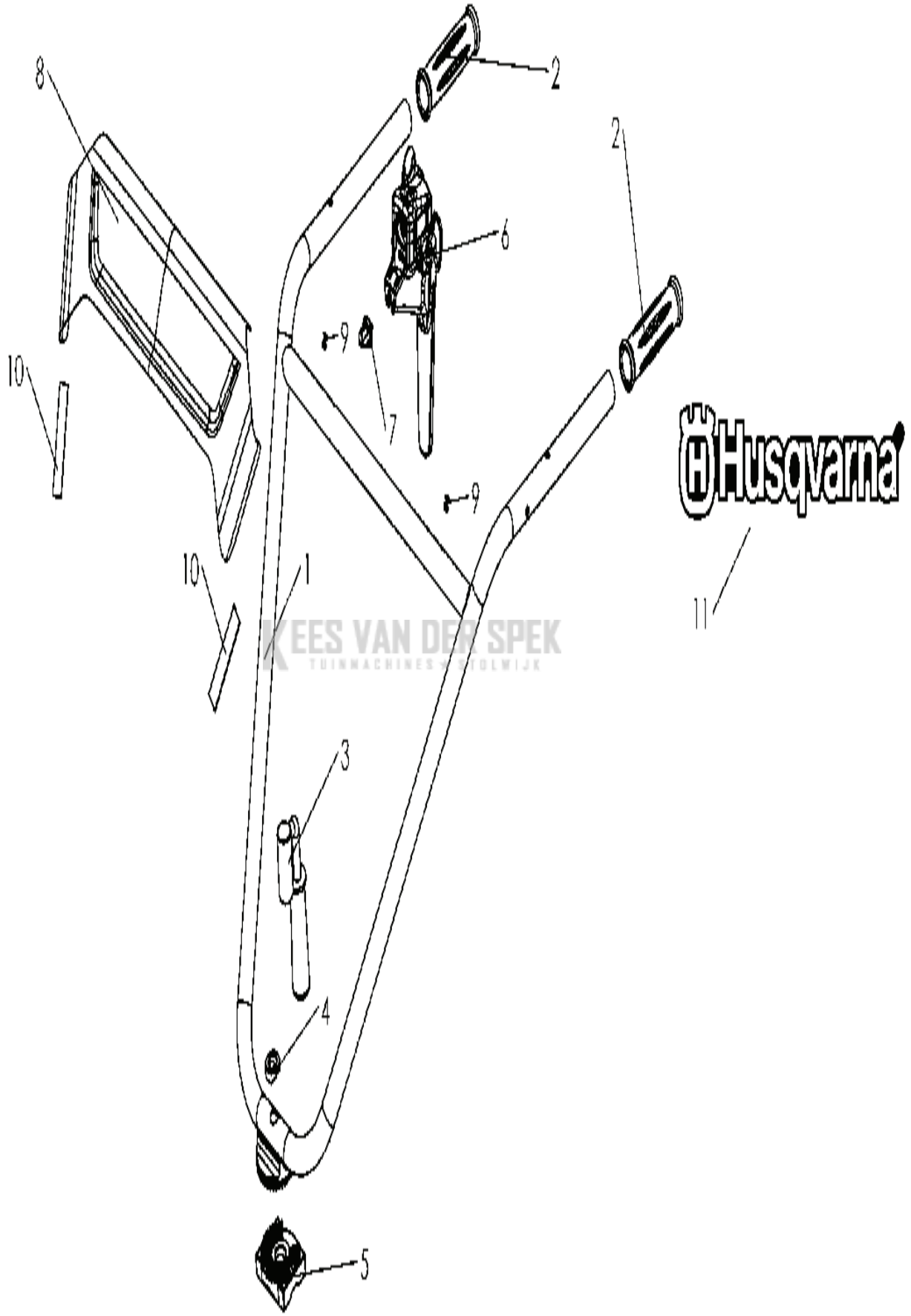

KEES VAN DER SPEK
TUINMACHINES HOLWIJK

PXM_REF	PXM_ PARTNO	DESCRIPTION	PXM_REMARK	QTY.
1	590215701	STUUR	HANDLEBAR GREY 627	1
2	519000113	HENDEL	HAND SIDE GRIP diam. 25	2
3	590215801	HEFBOOM	HANDLEBAR TIGHTENING LEVER M 14 GREY	1
4	519653414	AFSTANDRING	TIGHTENING LEVER SPACER	1
5	519653415	AFSTANDRING	FILLER PIECE	1
6	590215901	HEFBOOM	HANDLEVER	1
7	590216001	BEDIENINGS KABEL	CLUTCH CABLE	1
8	590216101	PANEEL	HANDLE PANEL ORANGE	1
9	590216201	KLINKNAGEL	RIVET 4X10	2
10	590216301	STICKER	FACES DOUBLE TAPED	2
11	590171801	STICKER	STICKER HUSQVARNA	1

KEES VAN DER SPEK
TUINMACHINES ★ STOLWIJK

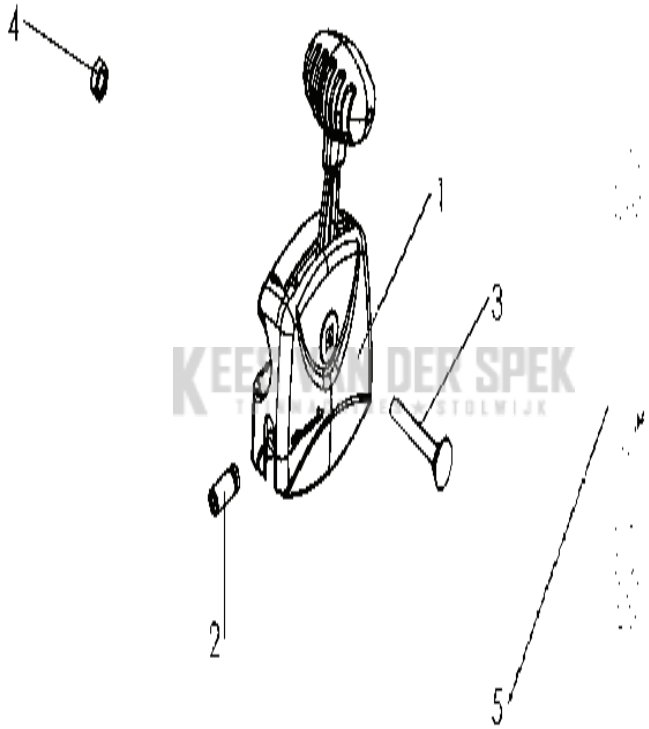
4
2
1
3
5

PXM_REF	PXM_ PARTNO	DESCRIPTION	PXM_REMARK	QTY.
1	577453001	GASHEFBOOM	THROTTLE LEVER	1
2	577525001	GASKABEL	THROTTLE CABLE	1
3	577453801	SCREW	SCREW TRCC 6X45 Z	1
4	732261601	MOER	BLOCKING NUT M 6 Z	1
5	519646680	STICKER	STICKER THROTTLE CONTROL	1

KEES VAN DER SPEK
TUINMACHINES ★ STOLWIJK

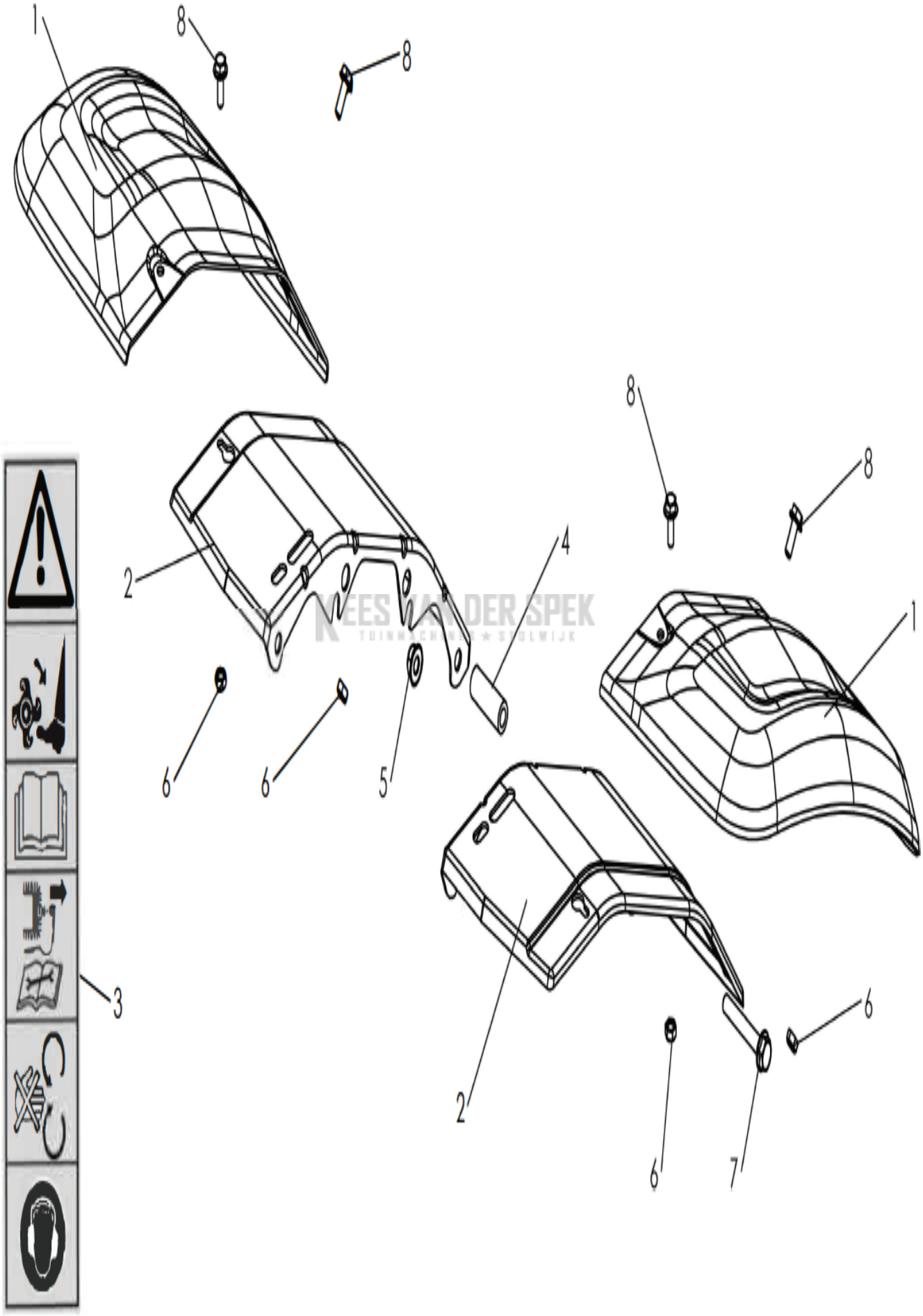

KEES VAN DER SPEK
TUINMACHINES ★ SOEST

PXM_REF	PXM_ PARTNO	DESCRIPTION	PXM_REMARK	QTY.
1	590171001	BESCHERMEN	ADDITIONAL TINE GUARD ORANGE	2
2	590171101	BESCHERMEN	TINE GUARD GREY 627	2
3	587995501	STICKER	STICKER SECURITY	1
4	590171201	AFSTANDRING	SPACER 8.2X14X41	1
5	586721001	MOER	SCREW BDR HM8 SMOOTH BASE	1
6	732261601	MOER	BLOCKING NUT M 6	4
7	575361601	SCREW	SCREW H 8X55 Z NOTCHED SHOULDER	1
8	519653435	SCREW	SCREW HM 6X16 NOTCHED SHOULDER	4

KEES VAN DER SPEK
TUINMACHINES ★ STOLWIJK

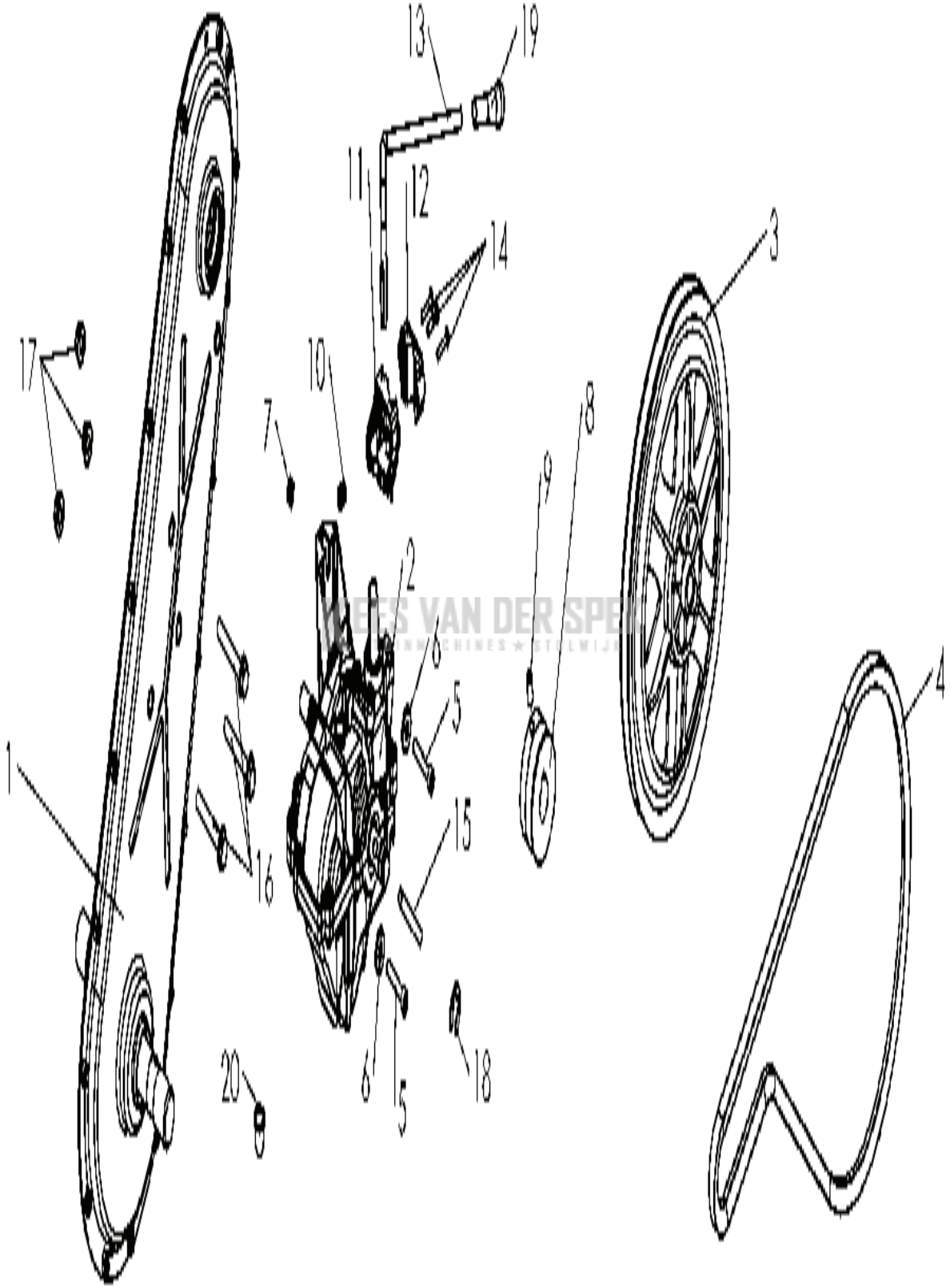

WEES VAN DER SPEK
TUINMACHINES ★ STOLWIJK

PXM_REF	PXM_ PARTNO	DESCRIPTION	PXM_REMARK	QTY.
1	590213201	TRANSMISSIE	BOLTED TRANSMISSION 8/37	1
2	590213301	GEARBOX	GEAR BOX 2 FRONT SPEED 1 REVERSE SPEED	1
3	519653060	POELIE	TRANSMISSION PULLEY	1
4	590213401	RIEM	BELT	1
5	519653026	SCREW	SCREW CHC M6x35z	2
6	531008390	RING	SPECIAL WASHER 6,3 X19X 2,5 Z	2
7	732261601	MOER	BLOCKING NUT M 6 Z	1
8	544243901	POELIE	ENGINE PULLEY diam. 55 BORE 19,06	1
9	728692300	SCREW	SCREW ST HC M8X16 DIN 914 45H	1
10	580315801	BORGVEER	LOCKING SPRING	1
11	590213501	HEFBOOM	SELECTOR	1
12	590213601	KLEM	SPEED LEVER CLAMP	1
13	590213701	HEFBOOM	SPEED LEVER	1
14	531009449	SCREW	SCREW WN 1452 K40X20 TORX	3
15	519653067	AS	PULLEY PIN SHAFT	1
16	575361601	SCREW	SCREW H 8X55 Z NOTCHED SHOULDER	3
17	586721001	MOER	SCREW BDR HM8 SMOOTH BASE	3
18	580314201	RETAINER RING	RADIAL RETAINING RING diam. 12	1
19	590213801	DEKSEL	LEVER CAP	1
20	590213901	DEKSEL	CAP	1

KEES VAN DER SPEK
TUINMACHINES ★ STOLWIJK

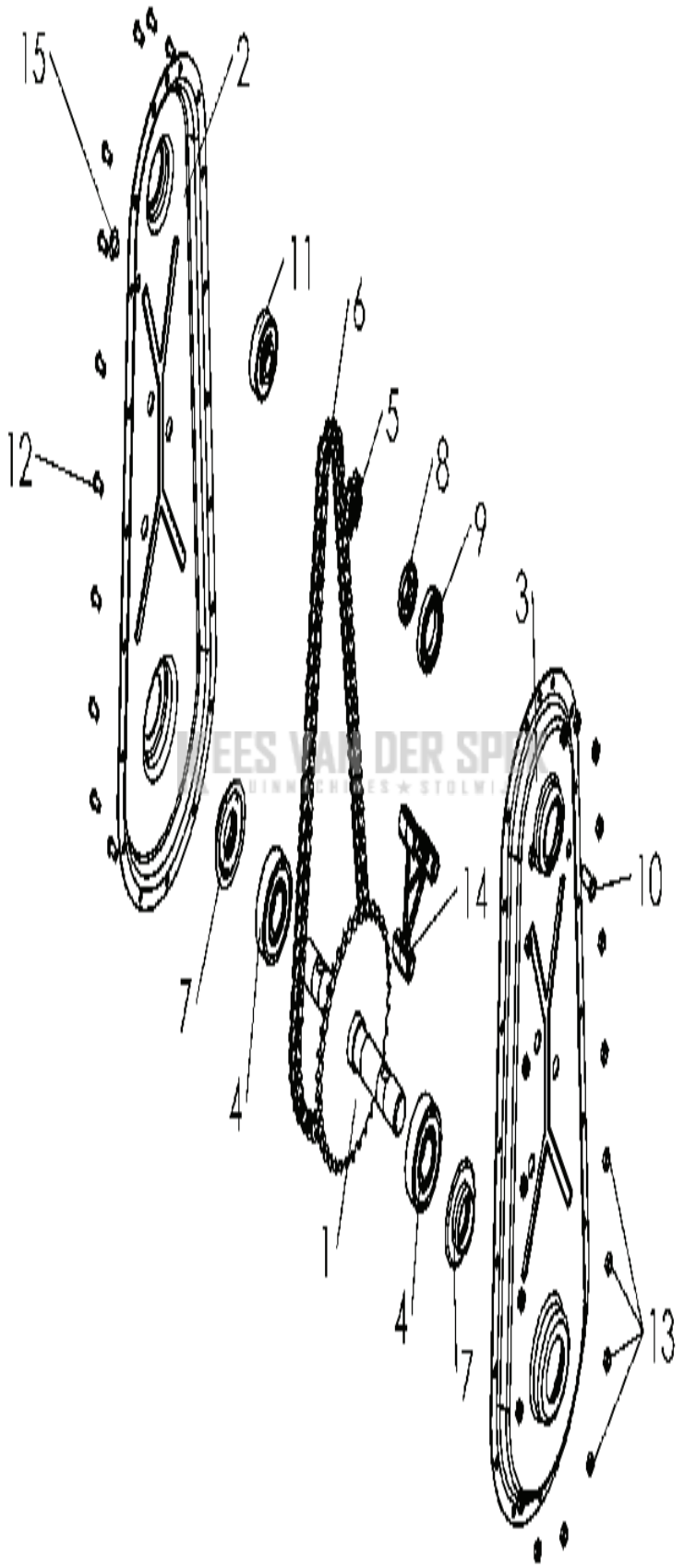
15
2
11
6
5
12
8
9
3
10
14
7
4
1
4
7
13

PXM_REF	PXM_ PARTNO	DESCRIPTION	PXM_REMARK	QTY.
1	580317001	ZAAGBLADAS	BLADE SHAFT 37 TEETH 12.7	0
2	590214001	HUIS	TRANSMISSION HOUSING RIGHT	0
3	590214101	HUIS	TRANSMISSION HOUSING LEFT	0
4	519653053	LAGER	BALL BEARING 6305 2RS	2
5	519653057	RONDSEL	PIGNON 8 TEETH 12.7	0
6	580316301	KETTING	CHAIN (78 LINKS RSF) 08B 12.7	0
7	531008576	RING	TRANSMISSION SEAL	2
8	580315301	AFSTANDRING	TRANSMISSION SPACER	1
9	580315901	KOGELLAGER	BALL BEARING 6906 2RS	0
10	580313901	INVOEGEN	INSERT M6	0
11	531008546	RING	SPECIAL BALL BEARING 6204 2RS	0
12	580313701	SCREW	SCREW TORX M6X12	19
13	732261601	MOER	BLOCKING NUT M 6 Z	19
14	585365501	AFSTANDRING	SPACER FOR TRANSMISSION	0
15	590214301	PLUG	GREASE CAP	1

KEES VAN DER SPEK
TUINMACHINES ★ STOLWIJK

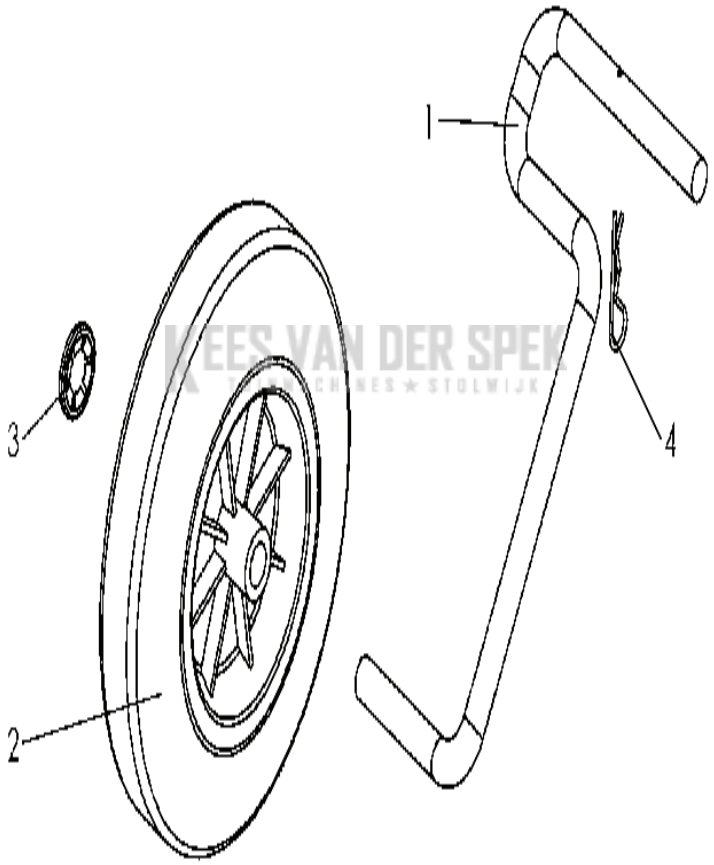

KEES VAN DER SPEK
MACHINES ★ STOLWIJK

PXM_REF	PXM_ PARTNO	DESCRIPTION	PXM_REMARK	QTY.
1	577448001	WIEL	TRANSPORT WHEEL SUPPORT WIRE diam. 14	1
2	577447801	WIEL	BLACK WHEEL diam. 200 BORE 14	1
3	577463101	RING	STARLOCK WASHER diam. 14	1
4	519651220	PIN RETAINING SCREW	CLIP PIN BETA 2 Z	1

KEES VAN DER SPEK
TUINMACHINES ★ STOLWIJK

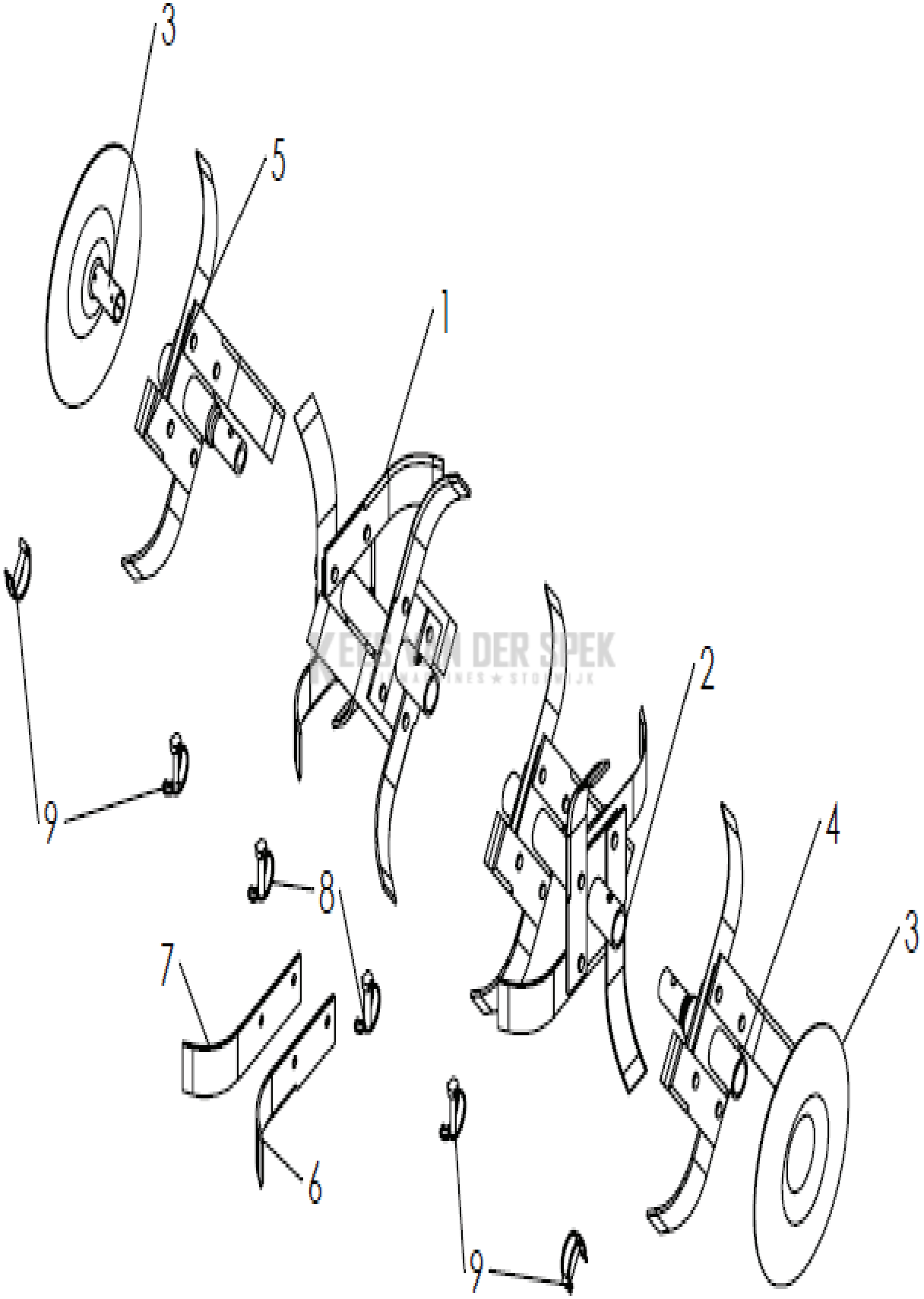
3
5
1
2
4
3
9
8
7
6
9

PXM_REF	PXM_ PARTNO	DESCRIPTION	PXM_REMARK	QTY.
1	519653029	MES		1
2	519653028	MES		1
3	590173301	SCHIJF		2
4	531008214	MES		1
5	531008215	MES		1
6	519653447	MES		1
7	519653448	MES		1
8	577453601	KLEM		2
9	577453501	KLEM		4

KEES VAN DER SPEK
TUINMACHINES ★ STOLWIJK