DSH 2500 T Brushcutter

Documenten

Engine

Starter assy and clutch

Tank and air filter

Transmission

Carburettor

Head Tap&Go D.110

KEES VAN DER SPEK
TUINMACHINES ★ STOLWIJK

Copyright EMAK S.P.A.

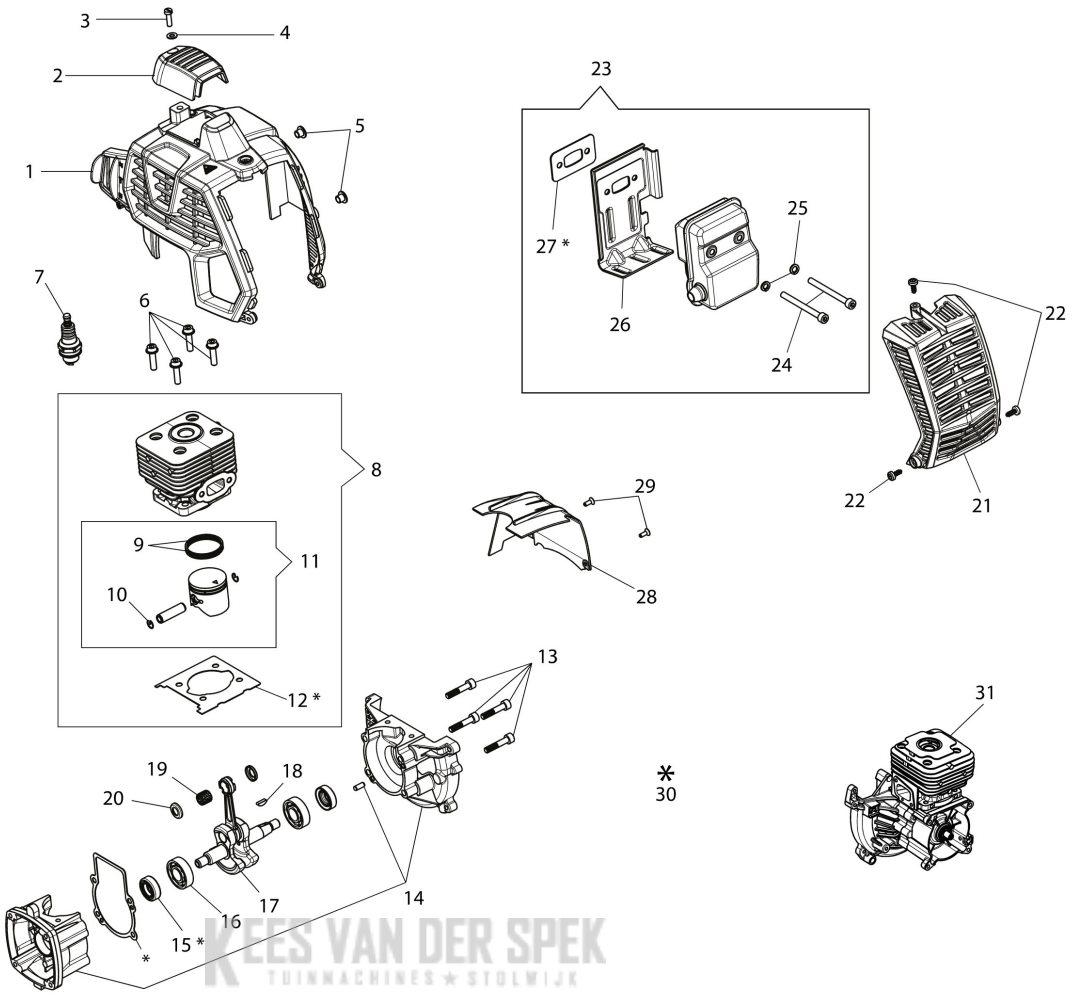

KEES VAN DER SPEK
TUINMACHINES ★ STOLWIJK

Copyright EMAK S.P.A.

Ref.Nu	Qty	Part number	Description	Validity from	Validity till	Notes	Bulletin
1	1	61462029R	Engine cover				
2	1	61460499AR	Cover				
3	1	3908042R	Screw				
4	1	3916004R	Washer				
5	2	61450060R	Bushing				
6	4	3860095R	Screw				
7	1	3055104R	Spark plug				
8	1	61460025	Complete cylinder				
9	1	61460014R	Piston ring				
10	1	61460013R	Ring				
11	1	61460187R	Piston assy				
12	1	61460127R	Gasket				
13	4	3801089R	Screw				
14	1	61462001BR	Crankcase assy				
15	2	3050057R	Oil seal				
16	2	3034009R	Bearing				
17	1	61460300AR	Crankshaft				
18	1	3028026R	Key				
19	1	3037031R	Bearing				
20	2	61460007R	Spacer				
21	1	61460367R	Muffler cover				
22	3	3960121R	Screw				
23	1	61462005R	Complete muffler				
24	2	3901063R	Screw				
25	2	3916005R	Washer				
26	1	61460242BR	Deflector				
27	1	61460470R	Gasket				
28	1	61460350R	Deflector				
29	2	3802015R	Screw				
30	1	61460024	Gasket set				
31	1	61460103R	Short block				

KEES VAN DER SPEK
TUINMACHINES ★ STOLWIJK

Copyright EMAK S.P.A.

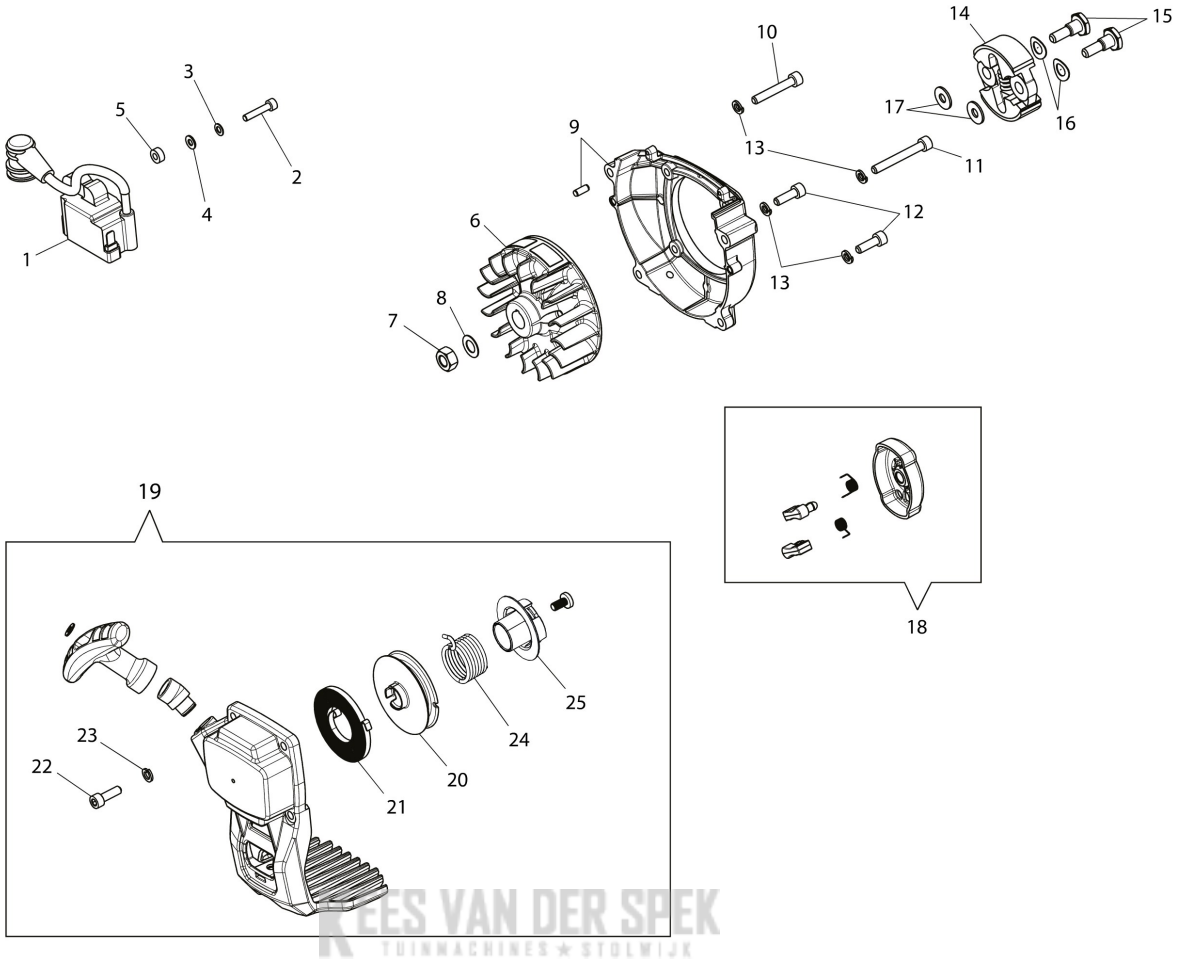

KEES VAN DER SPEK
TUINMACHINES ★ STOLWIJK

Copyright EMAK S.P.A.

Illustratie Starter assy and clutch

Ref.Nu	Qty	Part number	Description	Validity from	Validity till	Notes	Bulletin
1	1	2501028BR	Ignition coil				
2	2	3801007R	Screw				
3	2	006000315R	Washer				
4	2	3916004R	Washer				
5	2	61170014AR	Spacer				
6	1	61460420R	Flywheel				
7	1	3912009	Nut				
8	1	3833080R	Washer				
9	1	61462083CR	Flange				
10	1	3901082R	Screw				
11	1	3801066	Screw				
12	2	3801011R	Screw				
13	4	3819006R	Washer				
14	1	61460277R	Clutch				
15	2	61460070R	Pin				
16	2	61460072R	Washer				
17	2	61460071R	Washer				
18	1	58070221R	Clutch driver				
19	1	61460035R	Starter assy				
20	1	61370022AR	Starter pulley				
21	1	61070036R	Spring				
22	4	3801013R	Screw				
23	4	3916005R	Washer				
24	1	61370237R	Spring				
25	1	61370023AR	Sprocket				

KEES VAN DER SPEK
TUINMACHINES ★ STOLWIJK

Copyright EMAK S.P.A.

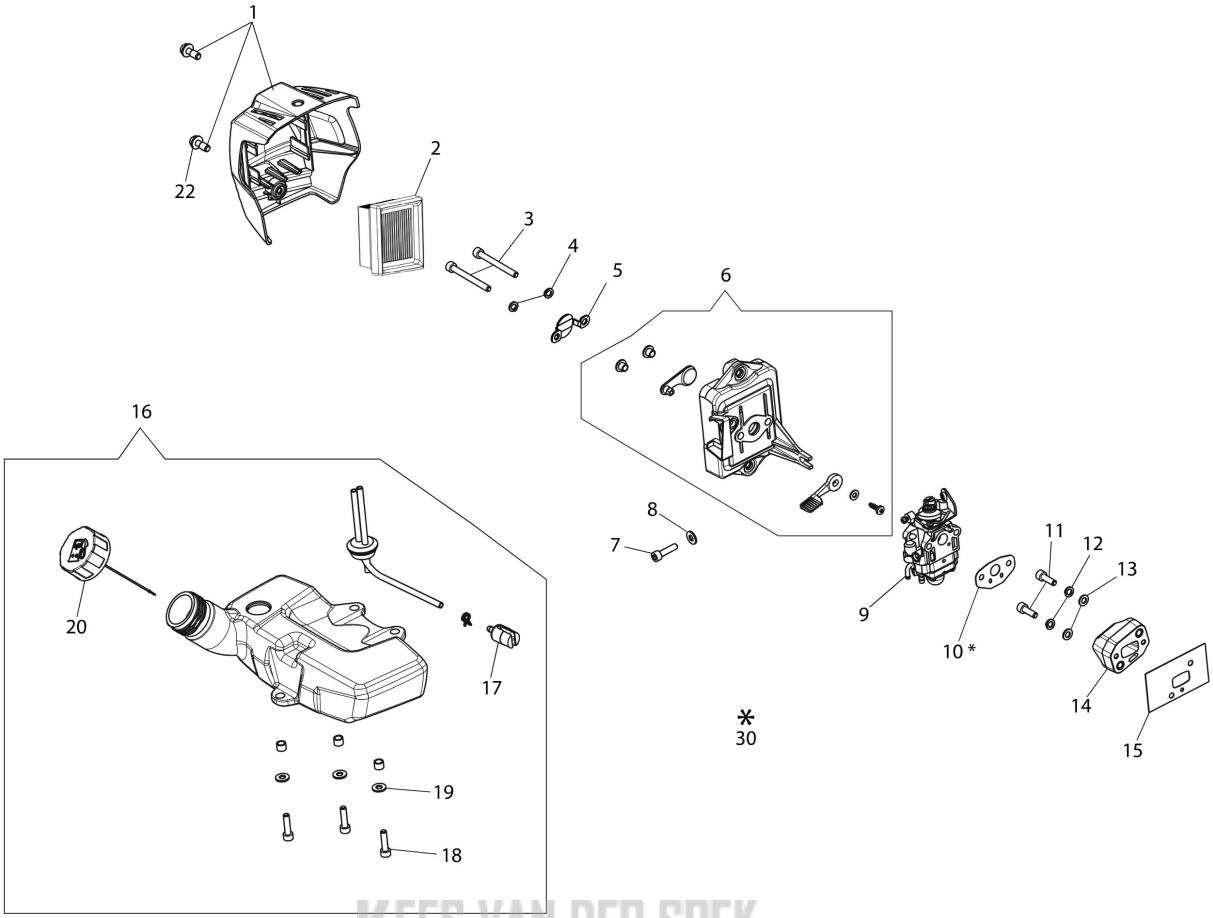

KEES VAN DER SPEK
TUINMACHINES ★ STOLWIJK

Copyright EMAK S.P.A.

Illustratie Tank and air filter

Ref.Nu	Qty	Part number	Description	Validity from	Validity till	Notes	Bulletin
1	1	61450045	Air filter cover				
2	1	61450425R	Air filter				
3	2	3801012R	Screw				
4	2	3819006R	Washer				
5	1	61450016R	Plate				
6	1	61450047	Air filter support				
7	1	3801010R	Screw				
8	1	3918010R	Washer				
9	1	2318557R	Carburetor				
10	1	61460054R	Gasket				
11	2	3801015R	Screw				
12	2	3819006R	Washer				
13	2	3916005R	Washer				
14	1	61460053BR	Insulator				
15	1	61460052R	Gasket				
16	1	61460211R	Tank assy				
17	1	094600450R	Fuel filter				
18	3	3801013R	Screw				
19	3	3918010R	Washer				
20	1	BF000024R	Tank cap				
22	2	61330040AR	Screw				
30	1	61460024	Gasket set				

KEES VAN DER SPEK
TUINMACHINES ★ STOLWIJK

Copyright EMAK S.P.A.

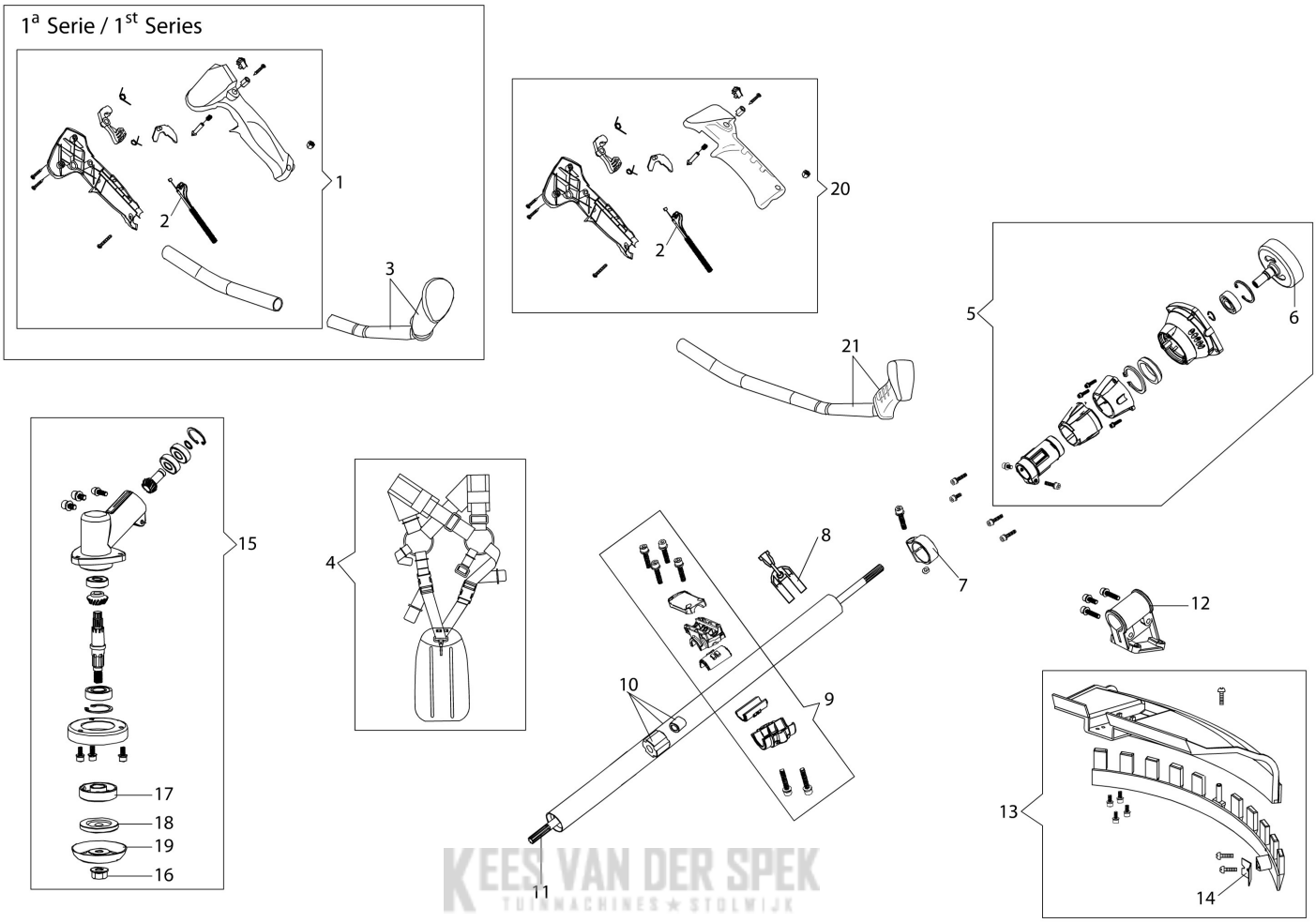

KEES VAN DER SPEK
TUINMACHINES ★ STOLWIJK

Copyright EMAK S.P.A.

Ref.Nu	Qty	Part number	Description	Validity from	Validity till	Notes	Bulletin
1	1	BF000059R	Complete handle		Agosto 2020 / August 2020		BT3-145-09/20
2	1	BF000016R	Throttle cable				
3	1	BF000022R	Handle and knob		Agosto 2020 / August 2020		BT3-145-09/20
4	1	4160463AR	Single harness				
5	1	BF000033R	Starter case				
6	1	BF000035R	Clutch drum				
7	1	BF000012R	Band				
8	1	BF000013R	Band				
9	1	61450328R	Complete clamp				
10	1	BF000014R	Tube Ø26				
11	1	BF000015R	Drive shaft				
12	1	BF000008R	Bracket				
13	1	BF000029R	Guard kit				
14	1	BF000009R	Blade				
15	1	61450441R	Bevel gear				
16	1	BF000007R	Nut				
17	1	BF000037R	Hub				
18	1	BF000038R	Flange				
19	1	BF000036R	Guard				
20	1	BF000059R	Complete handle	Settembre 2020 /			BT3-145-09/20
21	1	BF000058R	Handle and knob	Settembre 2020 / September 2020			BT3-145-09/20

KEES VAN DER SPEK
TUINMACHINES ★ STOLWIJK

Copyright EMAK S.P.A.

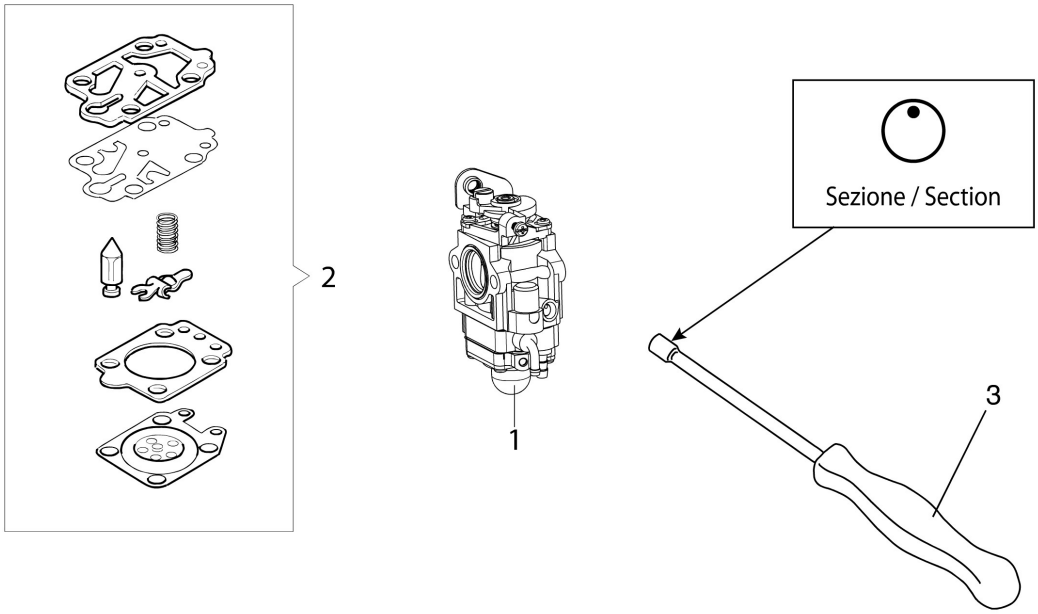

KEES VAN DER SPEK
TUINMACHINES ★ STOLWIJK

Copyright EMAK S.P.A.

Ref.Nu	Qty	Part number	Description	Validity from	Validity till	Notes	Bulletin
1	1	2318557R	Carburetor				
2	1	2318025R	Repair kit				
3	1	3055155R	Special screwdriver				

KEES VAN DER SPEK
TUINMACHINES ★ STOLWIJK

Copyright EMAK S.P.A.

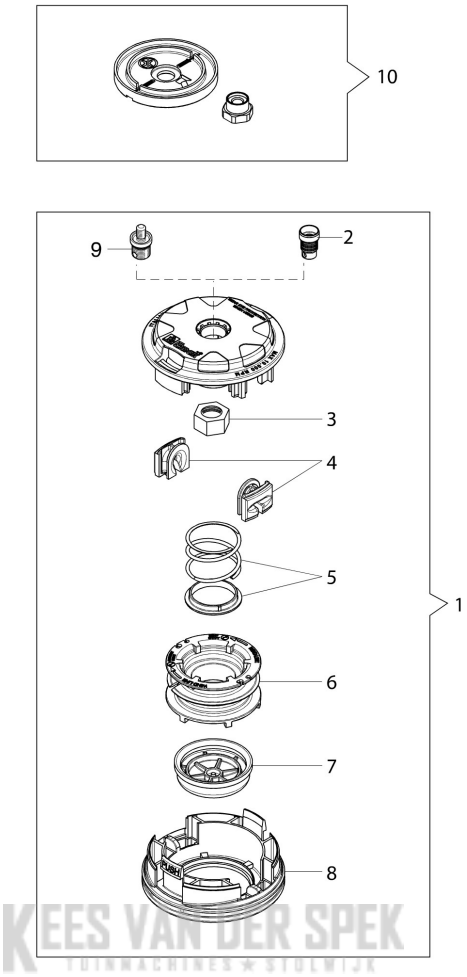

KEES VAN DER SPEK
TUINMACHINES ★ STOLWIJK

Copyright EMAK S.P.A.

Illustratie Head Tap&Go D.110

Ref.Nu	Qty	Part number	Description	Validity from	Validity till	Notes	Bulletin
1	1	61469101	Complete nylon head Ø 2,4				
2	1	63120041R	Insert				
3	1	63120040R	Nut				
4	2	61460049	Bushing				
5	1	63100018R	Kit spring				
6	1	61460023	Nylon spool				
7	1	61460022	Knob kit				
8	1	61460051	Lower cover				
9	1	63120042R	Insert (male)				
10	1	61460055	Guard kit				

KEES VAN DER SPEK
TUINMACHINES ★ STOLWIJK

Copyright EMAK S.P.A.