ILLUSTRATED PARTS LIST

MODEL NO. 96051018900
CUSTOMER CATALOG NO. TC 138L
PRODUCT NO. 960 51 01-89

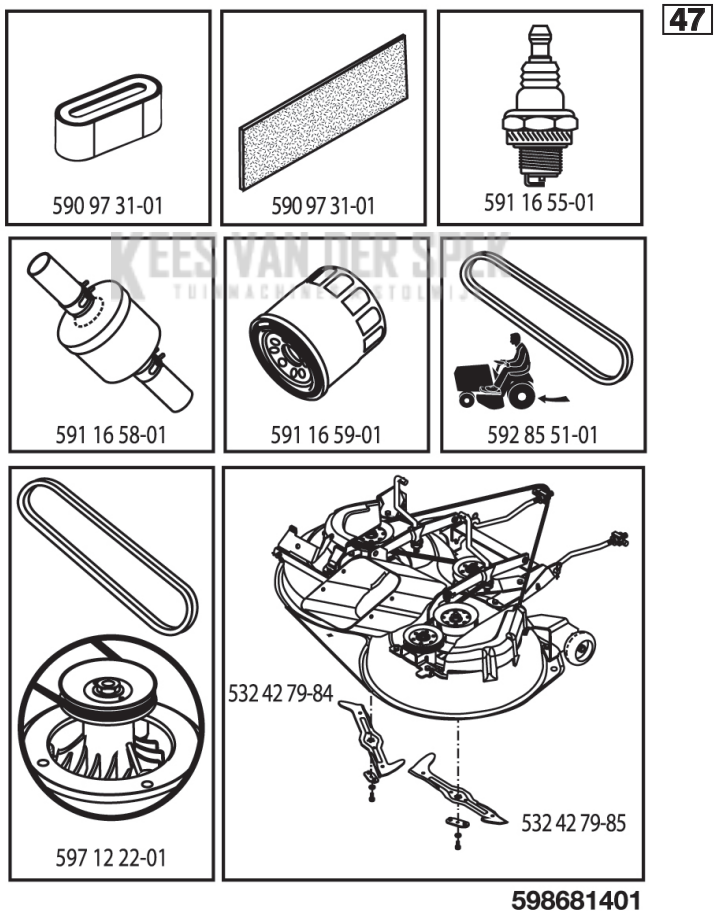

KEES VAN DER SPEK
TUINMACHINESPECIALISTEN

TRACTOR - - MODEL NO. TC 138L (96051018900), PRODUCT NO. 960 51 01-89
DECALS 27

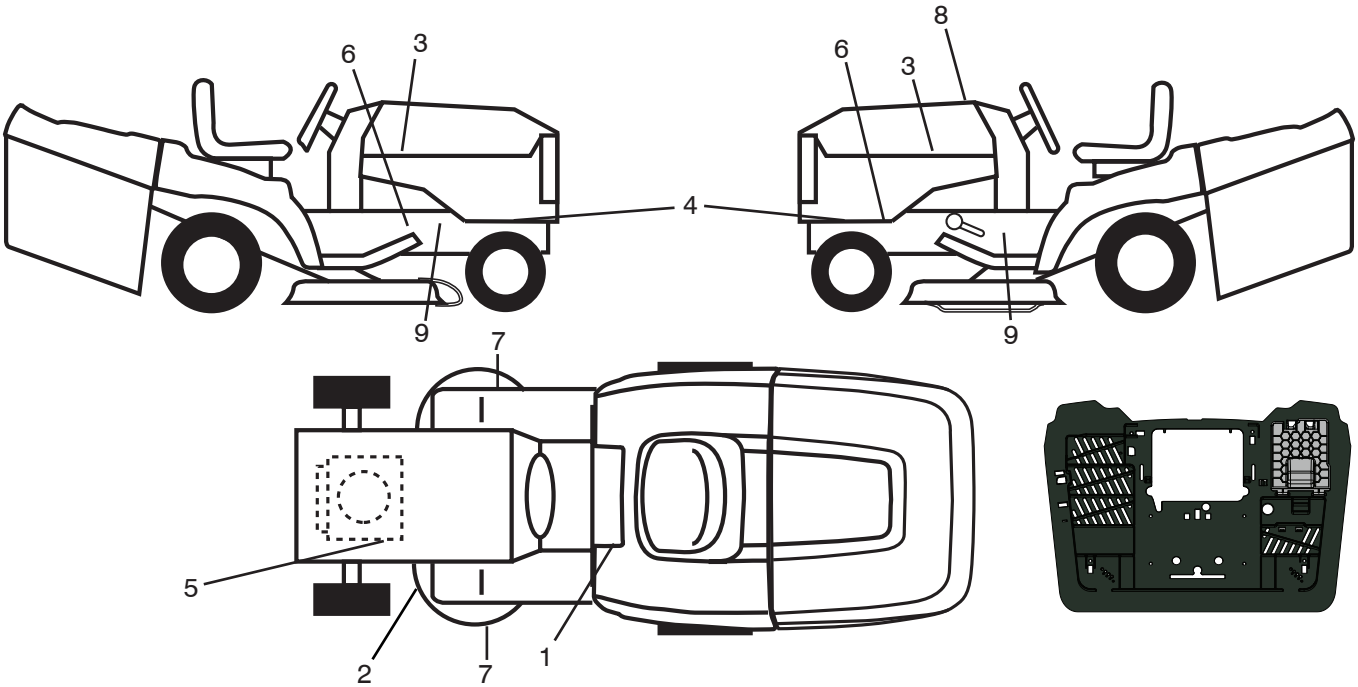

KEY NO.	PART NO.	DESCRIPTION
1	586 04 73-02	Decal, Saddle Warn
2	592 98 02-01	Decal, V-Belt, Sch
3	501 13 14-01	Decal, Hood RH/LH
4	598 49 52-01	Decal, Side Panel
5	581 57 97-01	Decal, Engine
6	581 57 96-01	Decal, Chassis Hot Muffler
7	581 57 91-01	Decal, Cut Finger
8	598 68 14-01	Decal, Replacement
9	581 57 98-01	Decal, Warning

KEY NO.	PART NO.	DESCRIPTION
- -	532 44 27-44	Decal, Battery Door
- -	532 44 18-02	Pad Footrest RH
- -	532 44 14-09	Pad Footrest LH
- -	114 20 72-20	Manual Operator's (Euro)
- -	114 20 73-10	Manual Operator's (Scan)
- -	114 20 74-50	Manual Operator's (E-Bloc)
- -	114 20 75-40	Manual Operator's (Baltic)
- -	114 20 77-53	Manual Operator's (Ukr)
- -	114 20 76-76	Manual Operator's (Turk)

KEES VAN DER SLUIS
TUINMACHINES & STO

WHEELS & TIRES

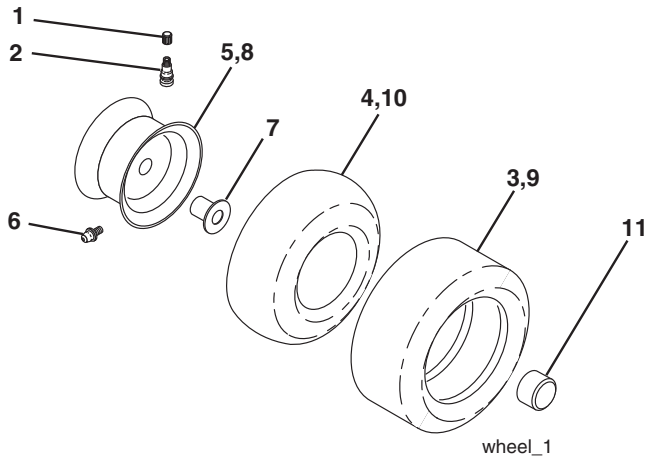

KEY NO.	PART NO.	DESCRIPTION
1	532 05 91-92	Cap Valve Tire
2	532 06 51-39	Stem Valve
3	532 10 62-22	Tire Front 15 x 6-6
4	532 05 99-04	Tube Inner Front #35060
5	532 13 83-36	Rim Asm 6" Front
6	532 00 02-78	Fitting Grease
7	532 00 90-40	Bearing Flange
8	532 13 83-37	Rim Asm 8" Rear
9	532 12 46-35	Tire Rear 18 x 8.5-8
10	532 00 71-52	Tube Rear 9.5 x 8
11	532 17 50-39	Cap Axle
- -	532 14 43-34	Sealant, Tire (10 oz. Tube)

NOTE:All component dimensions given in U.S. inches
1 inch = 25.4 mm

TRACTOR - - MODEL NO. TC 138L (96051018900), PRODUCT NO. 960 51 01-89
SCHEMATIC 38

SCH17R

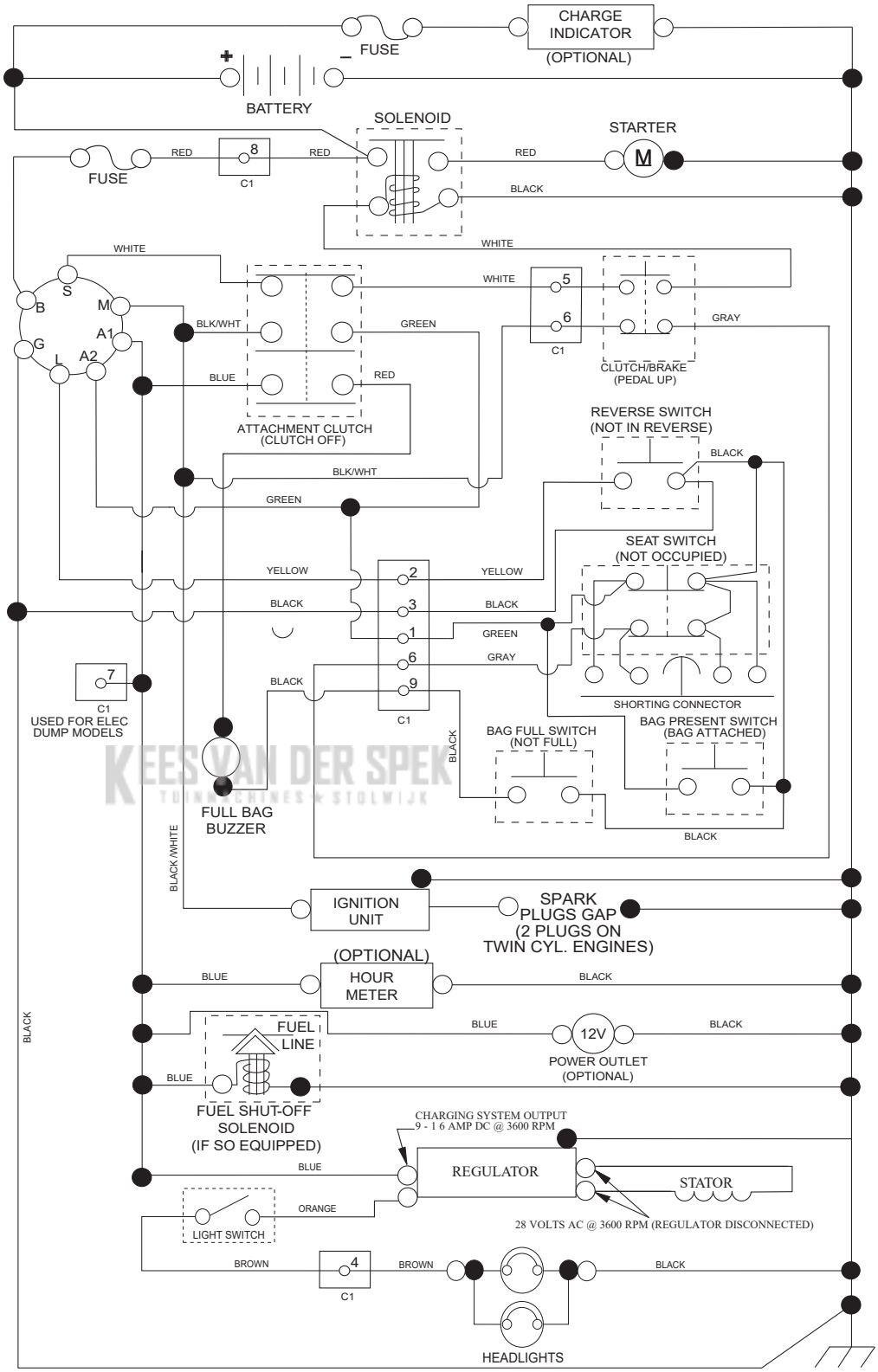

NOTE

YOUR TRACTOR IS EQUIPPED WITH A SPECIAL ALTERNATOR SYSTEM. THE LIGHTS ARE NOT CONNECTED TO THE BATTERY, BUT HAVE THEIR OWN ELECTRICAL SOURCE. BECAUSE OF THIS, THE BRIGHTNESS OF THE LIGHTS WILL CHANGE WITH ENGINE SPEED. AT IDLE THE LIGHTS WILL DIM. AS THE ENGINE SPEED IS INCREASED, THE LIGHTS WILL BECOME THEIR BRIGHTEST.

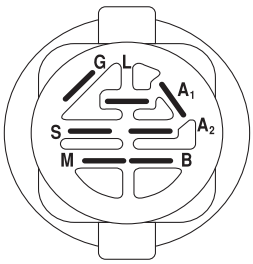

IGNITION SWITCH

POSITION	CIRCUIT "MAKE"	
OFF	M+G+A1	
RUN/OVERRIDE	B+A1	
RUN	B+A1	L+A2
START	B + S + A1	

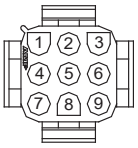

CHASSIS HARNESS CONNECTOR (C1) (MATING SIDE)

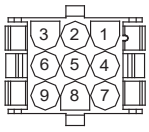

DASH HARNESS CONNECTOR (C1) (MATING SIDE)

WIRING INSULATED CLIPS NOTE: IF WIRING INSULATED CLIPS WERE REMOVED FOR SERVICING OF UNIT, THEY SHOULD BE RE-INSTALLED TO PROPERLY SECURE YOUR WIRING.

NON-REMOVABLE CONNECTIONS

REMOVABLE CONNECTIONS

KEES VAN DER SPEK TUINMACHINES STOLWIJK

TRACTOR - - MODEL NO. TC 138L (96051018900), PRODUCT NO. 960 51 01-89
ELECTRICAL 32

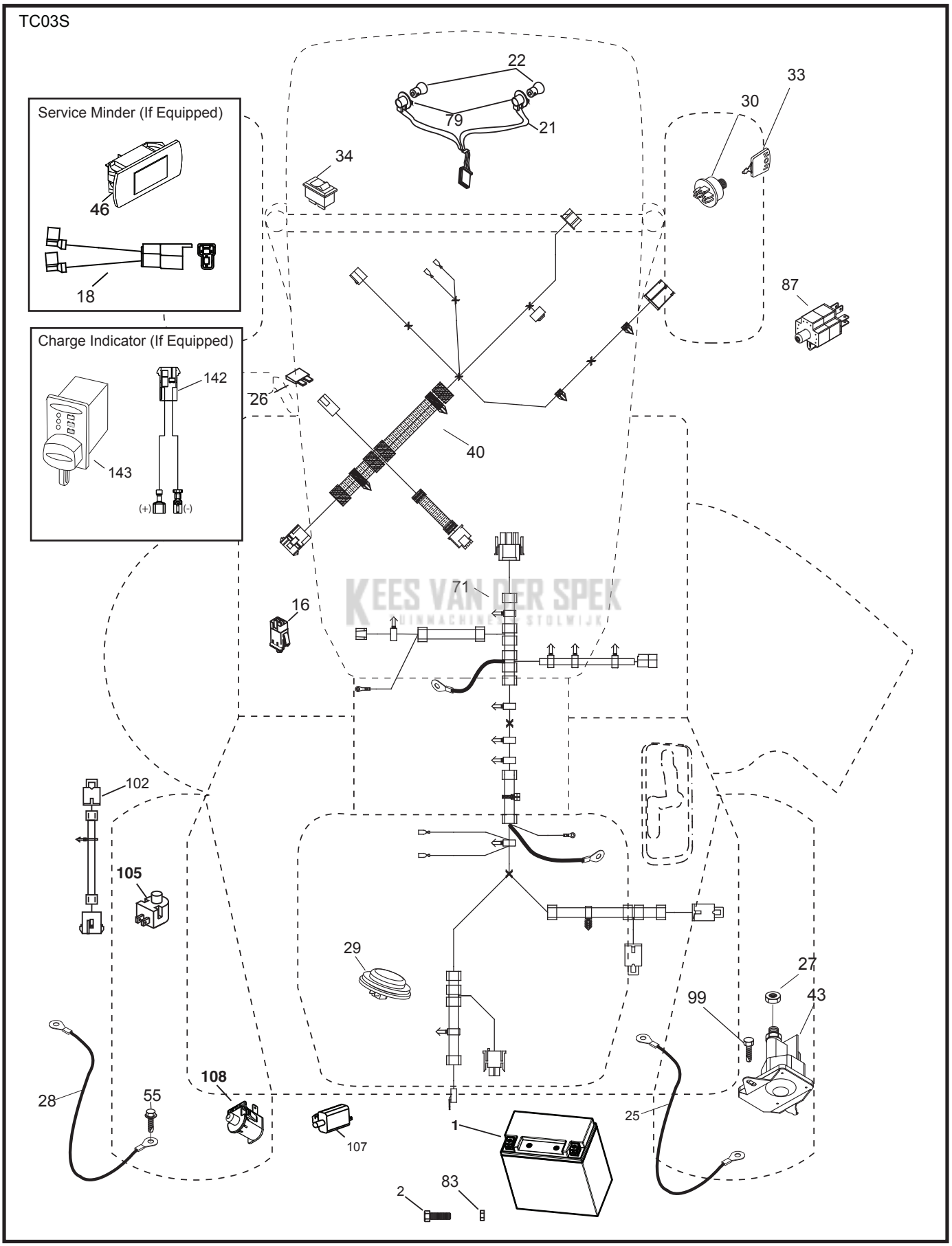

KEES VAN DER SPEK
MINMACHINES STOLWIJK

KEY NO.	PART NO.	DESCRIPTION
1	532 43 71-57	Battery
2	874 76 04-12	Bolt, Hex, 1/4-20 unc x 3/4
16	532 17 61-38	Switch Interlock
21	532 40 02-52	Harness Asm Light w/4152J
22	532 00 41-52	Bulb Light #1156
25	581 48 98-01	Cable Battery Red
26	532 17 51-58	Fuse
27	596 13 36-01	Locknut, KEPS 1/4-20
28	581 48 98-02	Cable Ground Black
29	532 40 15-45	Switch Seat
30	532 19 33-50	Switch Ignition
33	532 41 19-35	Key/Chain
34	532 11 07-12	Switch Light
40	532 42 10-02	Harness Ignition Dash
43	582 04 28-02	Solenoid
46	594 91 91-01	Hourmeter, Srvminder, Rect
55	817 06 05-12	Screw 5/16-18 x 3/4
71	532 44 08-20	Harness Chassis
79	532 17 52-42	Socket Asm.
83	594 08 65-01	Nut, Square M6 x 1
87	532 42 10-60	Switch Railmount
99	817 00 05-12	Screw 5/16-18 3/4
102	532 44 12-62	Harness Jumper
105	532 40 75-68	Switch Reverse
107	532 18 03-79	Switch Full Bagger Indicator
108	532 42 10-62	Switch Snapmount

NOTE: All component dimensions given in U.S. inches
1 inch = 25.4 mm

REPLACEMENT PARTS

TRACTOR - - MODEL NO. TC 138L (96051018900), PRODUCT NO. 960 51 01-89
CHASSIS AND ENCLOSURES 39

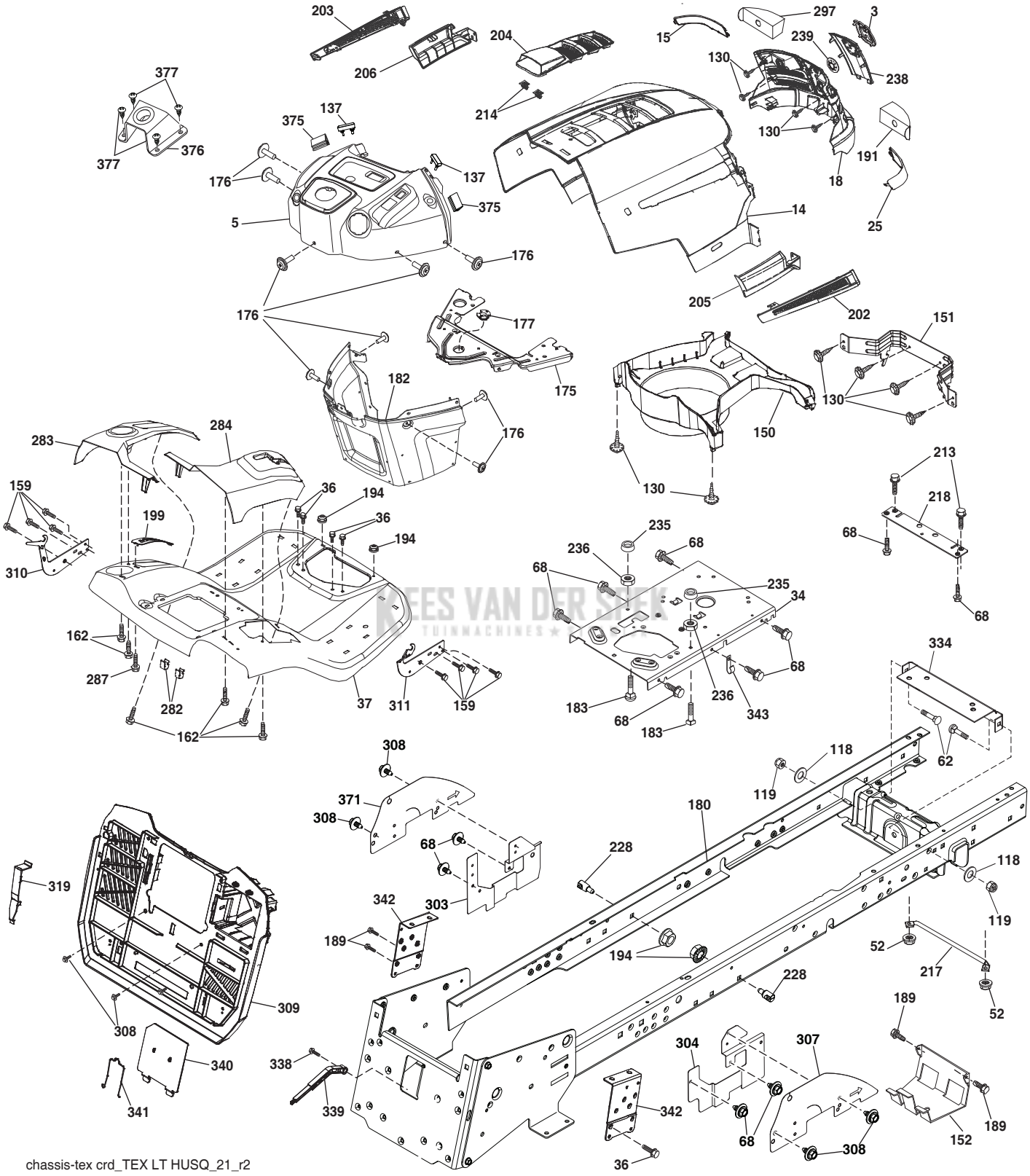

KEES VAN DER SLEEK TUINMACHINES

TRACTOR - - MODEL NO. TC 138L (96051018900), PRODUCT NO. 960 51 01-89
CHASSIS AND ENCLOSURES 39

KEY NO.	PART NO.	DESCRIPTION
3	581 05 63-01	Logo
5	532 43 89-64	Dash
14	532 44 12-67	Hood
15	532 44 14-28	Lens LH
18	532 44 13-68	Grille
25	532 44 14-27	Lens RH
34	580 91 09-01	Plate Engine
36	817 06 05-12	Screw 5/16-18 x 3/4
37	532 44 13-69	Fender
52	596 04 05-01	Nut Lock Hex PRVL 5/16-18
62	596 72 82-01	Bolt Carri 3/8-16 x 1" Gr. 5
68	596 03 07-01	Screw Hexagon 5/16-18 x 1/2
118	596 56 53-01	Washer 3/8 x 0.08 in ST CLR Zinc
119	596 32 26-01	Nut.Crownlock.3/8-16 unc
130	596 32 17-01	Screw #10 x 0.750 BOS Thread
137	532 40 75-90	Bumper Dash
150	532 40 66-62	Air Duct
151	532 40 78-07	Bracket Pivot
152	532 19 95-35	Shield Browning
159	817 00 06-12	Screw Hxwsh Thdrl 3/8-16 x 3/4 Bl.
162	596 13 41-01	Screw Hex Tap 1/4-15 x 1/2
175	532 19 94-72	Crossmember
176	532 40 07-76	Screw 10-24 x 5/8
177	532 19 52-28	Bushing Steering
180	581 18 71-01	Chassis
182	532 40 71-76	Dash Lower
183	595 30 57-01	Screw.Hexagon.5/16-18 x 1-1/4
189	817 00 05-12	Screw 5/16-18 x 3/4
191	532 41 65-01	Insert Reflective RH
194	596 13 57-01	Nut Lock PRVL Torq 5/16-18 x .68
199	532 41 87-39	Plate Deck Lift
202	532 44 13-42	Vent Side Hood RH
203	532 44 13-43	Vent Side Hood LH
204	532 44 13-75	Vent Top Hood
205	532 44 13-44	Skirt Side RH
206	532 44 13-45	Skirt Side LH
213	596 03 05-01	Bolt Hex HD 5/16-18 unc x 3/4
214	532 19 91-45	Clip Retainer
217	532 40 91-67	Rod Pivot Hood
218	532 19 63-95	X-Piece Hood Stop
228	593 82 40-01	Stud w/"D" Anti-Rotation
235	596 56 42-01	Spacer Fender CLR Zn
236	873 93 05 00	Nut Center Lock 5/16-18 unc
238	532 44 13-74	Trim
239	532 40 48-83	Clip Tinnerman
282	532 41 41-10	Clip Retainer
283	532 44 05-31	Console Deck Lift
284	598 70 58-01	Console Shift RH
287	817 60 04-06	Screw Hex Washead 1/4-20 x 3/8
297	532 40 66-65	Insert Reflective LH
303	589 00 76-02	Shield, Lower, LH, 30 Deck/CRD1&2
304	589 41 27-02	Shield , Lower, RH, CRD 1/CRD2 Fender
307	587 52 74-01	Shield Upper RH, Endshft, CRD, G1
308	532 17 18-77	Bolt 5/16-18 unc x 3/4
309	501 18 83-01	Backplate
310	532 44 54-28	Bracket Hangbar Bag LH
311	532 44 54-30	Bracket Hangbar Bag RH
319	532 17 46-62	Bracket Actuator Bagger
334	532 44 25-37	Bracket Engine
338	594 09 39-01	Bolt Shoulder 5/16-18 x .88
339	532 43 66-41	Lever Bagger Full
340	532 44 09-31	Door Battery Tray
341	582 06 08-01	Latch Batter Tray
342	582 82 68-02	Support Fender
343	532 44 07-49	Clip
371	587 49 45-01	Shield, Upper LH, CRD, SRD, ISO
375	586 90 82-01	Dash Clip-On Bumper
376	589 45 87-01	Mount Asm Huslt Upper Strng
377	589 45 53-01	Screw 10 x 1/2 ZN PL

NOTE: All component dimensions given in U.S. inches
1 inch = 25.4 mm

KEES VAN DER SLOOT TUINMACHINES

TRACTOR - - MODEL NO. TC 138L (96051018900), PRODUCT NO. 960 51 01-89
DRIVE 40

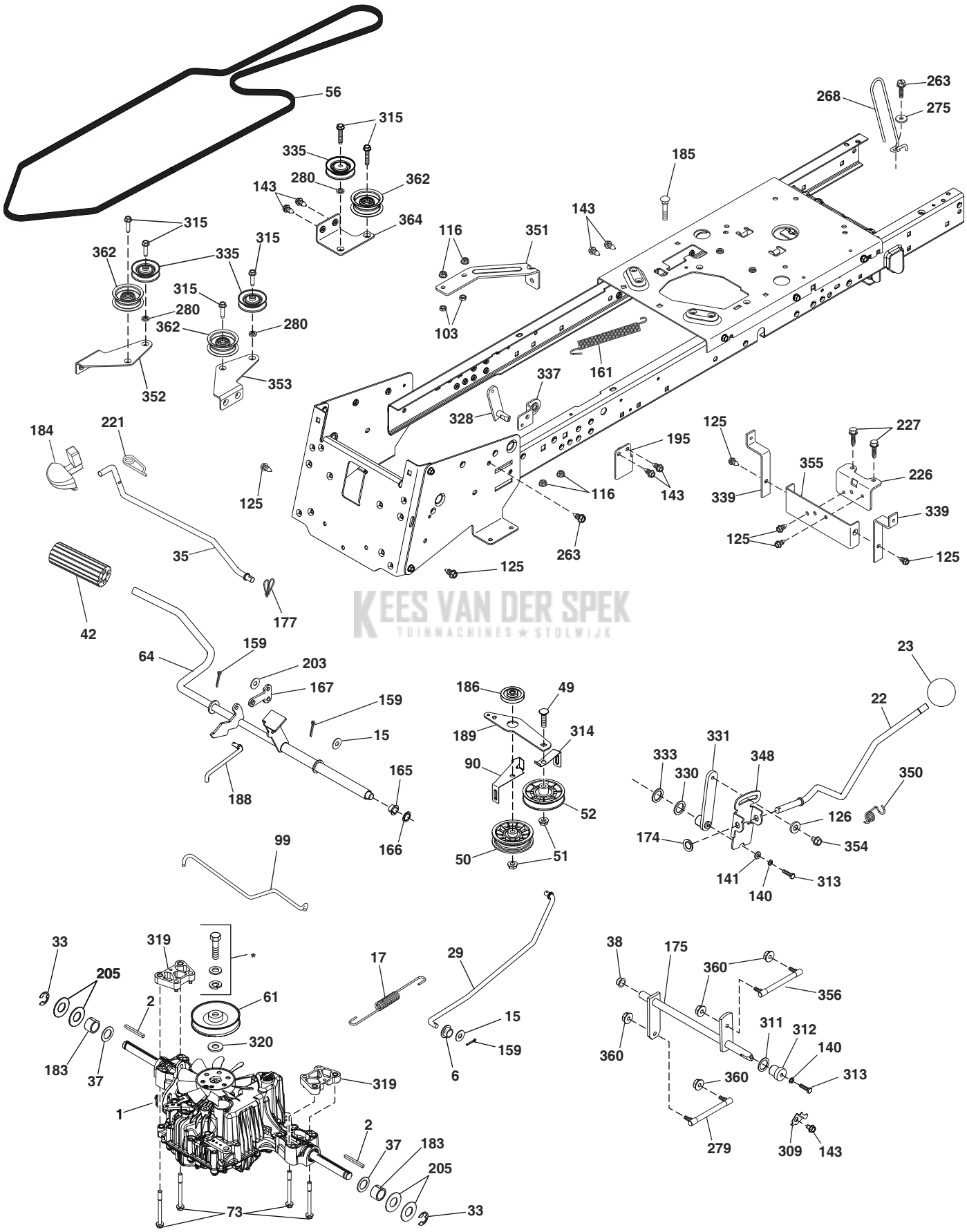

KEES VAN DER SPEK
TUINMACHINES ★ STOLWIJK

drive-tex CRD_K46_fender_8_r3

TRACTOR - - MODEL NO. TC 138L (96051018900), PRODUCT NO. 960 51 01-89
DRIVE 40

KEY NO.	PART NO.	DESCRIPTION
1	– – – – – –	Transaxle, Tufftorq K46DC (448355) (Order parts from transaxle manufacturer.)
2	532 12 35-83	Key Square
6	532 12 40-28	Bushing Snap
15	596 56 53-01	Washer 3/8 x 0.08 in ST CLR Zinc
17	532 43 62-27	Spring, Brake
22	532 44 32-46	Rod Shift
23	532 14 08-45	Knob
29	532 43 58-81	Rod, Brake
33	812 00 00-01	Ring E
35	596 87 48-01	Rod Control Park TXLT CLR Zinc
37	532 18 89-67	Washer Hardened
38	532 16 96-13	Nyliner Snap In
42	532 00 88-83	Cover, Foot Pedal
49	596 13 62-01	Bolt Cup Head 3/8-16 x 3/4
50	532 19 43-27	Idler Flat
51	873 90 06-00	Lock Nut 3/8-16
52	532 19 43-26	Idler V-Groove
56	592 85 51-01	V-Belt, Drive
61	532 43 77-88	Pulley Transaxle
64	532 19 62-00	Shaft Asm. Pedal Brake Control
73	874 49 05-60	Bolt Hex 5/16-18 x 3.75
90	532 44 36-05	Keeper Belt Clutching
99	532 44 39-47	Rod Spring Bypass
103	596 43 63-01	Nut Hex 5/16-18 x 0.577" Gr. 5 Zn
116	596 13 57-01	Nut Lock PRVL Torq 5/16-18 x .68
125	817 00 05-12	Screw 5/16-18 x 3/4
126	596 21 88-01	Washer 11/32 x 1 x 1/8
140	596 02 98-01	Spring Lock Washer Square Ends
141	596 03 98-01	Washer 9/32 x 3/4 x 10 Ga.
143	596 03 07-01	Screw Hexagon 5/16-18 x 1/2
159	596 02 95-01	Pin Cotter 1/8 Dia. x 3/4
161	532 10 57-09	Spring, Return, Clutch
165	532 19 62-12	Nyliner
166	532 42 91-64	Nut Push .625
167	532 40 52-57	Latch Brake Parking
174	532 19 72-89	Nut Push
175	532 44 18-23	Shaft Asm Shift
177	587 22 53-01	Pin, Cotter, Locking, Bowtie, 1 In.
183	532 13 70-57	Spacer Axle
184	532 41 14-84	Handle Park Brk.
185	872 11 06-22	Bolt 3/8-16 x 2-3/4
186	532 19 43-21	Spacer Retainer
188	582 21 70-01	Link Clutch Ground Drive
189	532 43 36-11	Bellcrank Ground Drive
195	580 45 69-01	Bracket Rod Brake
203	596 20 41-01	Washer 11/32 x 11/16 x 14
205	532 12 17-48	Washer 25/32 x 1-5/8 x 16 Ga.
221	532 40 31-87	Retainer Spring
226	532 40 15-64	Bracket Mount Torque
227	596 13 59-01	Bolt Hex 5/16-18 x 3/4 CLR.Zinc
263	817 00 06-12	Screw Thdr 3/8-16 x 3/4
268	596 88 78-01	Guard Muffler B&S OHV
275	596 13 54-01	Washer Plain 13/32 x 1 CLR Zinc
279	593 89 84-01	Link & Stud-Link.Subasm
280	596 03 99-01	Washer Plain 11/32 x 5/8 CLR
309	532 16 55-81	Plate Fstnr. Cross
311	532 16 98-45	Washer Nylon
312	532 16 56-14	Hub Tapered
313	596 04 07-01	Bolt Hex.1/4-20 x 1
314	532 44 47-13	Keeper Belt
315	817 58 05-20	Screw Thdrol 5/16-18 x 1.25
319	532 43 67-94	Spacer Transaxle
320	532 18 76-90	Washer Spacer
328	532 43 57-58	Shaft Shift Front
330	532 16 95-93	Washer Nyliner
331	532 44 36-06	Hub Shift
333	532 17 08-68	Washer Spring Wave
335	532 19 95-34	Idler V Pulley Grnd. Dr.
337	532 43 59-37	Bracket Support Shift
339	532 43 68-67	Strap Torque
348	532 44 36-07	Arm Clevis Rod
350	532 44 50-20	Spring Torsion
351	532 43 69-98	Bracket Deck Sway
352	532 43 58-19	Bracket Idler
353	532 43 65-77	Bracket Idler RH
354	594 09 41-01	Bolt, Hex, 5/16-18 x 5/8
355	532 43 56-69	Bracket
356	593 89 84-03	Link Shift Cross Shaft
360	532 44 47-14	Nut 5/16-24
362	532 43 68-12	Idler Flat
364	532 44 30-32	Bracket Idler

* Parts supplied by manufacturer

NOTE: All component dimensions given in U.S. inches
1 inch = 25.4 mm

KEES VAN DER SLUIS

TRACTOR - - MODEL NO. TC 138L (96051018900), PRODUCT NO. 960 51 01-89
ENGINE 24

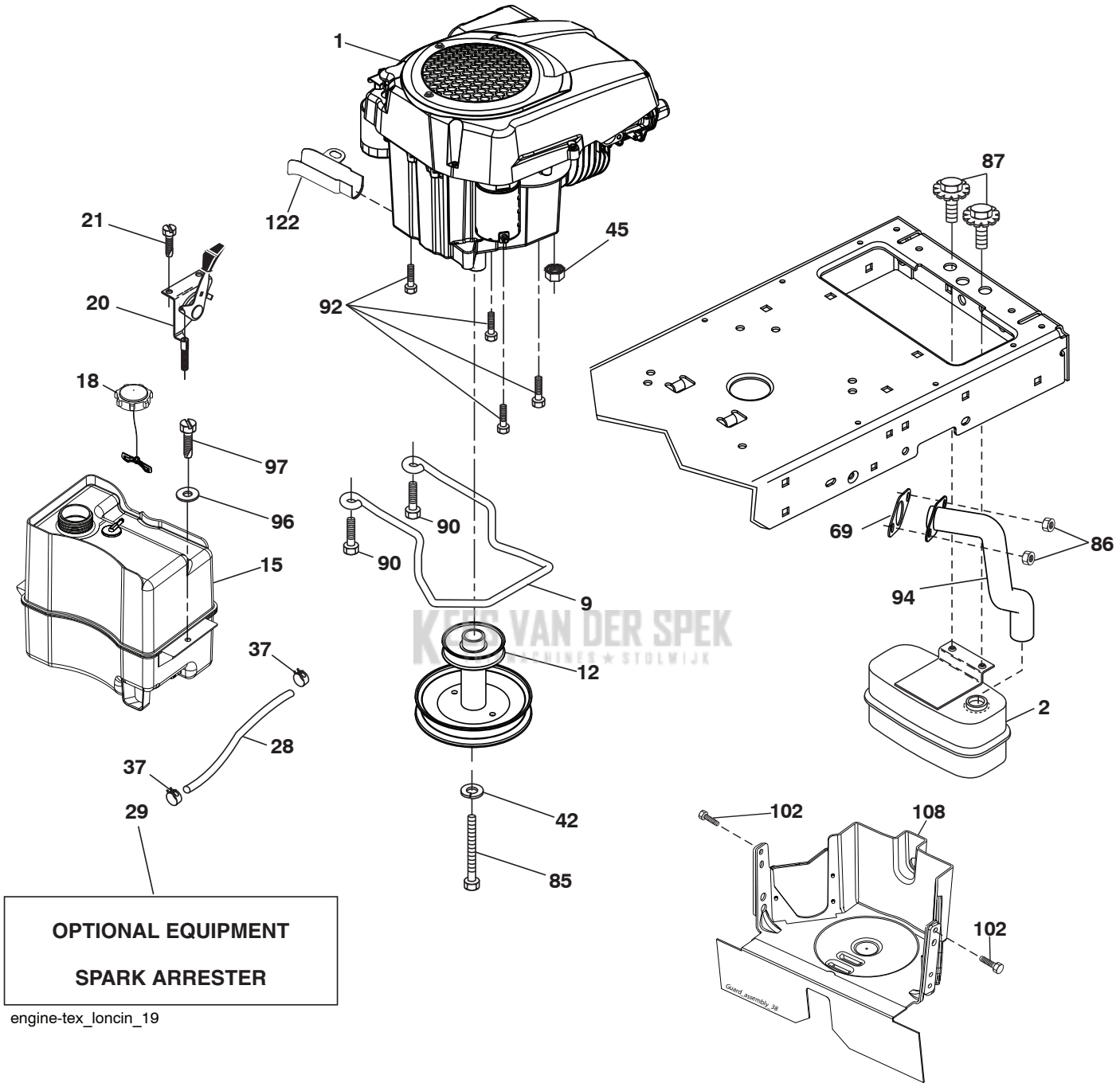

KEES VAN DER SPEK
TUINMACHINES ★ STOLWIJK

KEY NO.	PART NO.	DESCRIPTION
1	598 69 40-01	Engine Husqvarna Model No. HV 452CC Engine IPL available separately.
2	590 64 53-01	Muffler
9	501 83 26-02	Keeper Belt Engine
12	586 47 85-01	Pulley Engine
15	581 28 99-01	Tank Fuel
18	532 43 02-20	Cap Fuel
20	532 18 38-97	Control Throttle
21	596 32 17-01	Screw #10 x 0.750 BOS Thread
28	532 40 11-37	Fuel Line
29	532 13 71-80	Spark Arrester Kit
37	532 12 34-87	Clamp Hose
42	596 23 89-01	Washer SLW STD 7/16
45	593 35 64-01	Nut, Hexagon
69	590 86 35-01	Gasket
85	501 60 65-01	Bolt Hex 7/16-20 x 4 Gr. 5
86	532 18 43-62	Nut Hex Flange
87	532 17 18-77	Bolt 5/16-18 unc x 3/4 w/sems
90	817 00 06-16	Screw 3/8-16 x 1
92	817 12 06-16	Screw, 3/8-16 x 1 Smgml
94	590 86 47-01	Exhaust Tube
96	596 13 53-01	Washer 9/32 x 7/8 x 16 Ga.
97	817 67 04-12	Screw 1/4-20 x 3/4
102	593 33 76-01	Screw, 5/16-18 x 1.00, HWH, TRS
108	587 17 95-10	Cover, Pulley, Engine, W/Shield
122	532 42 19-22	Extension, Drain, Oil

NOTE: All component dimensions given in U.S. inches
1 inch = 25.4 mm

KEEP VAN DER BOEK

TRACTOR - - MODEL NO. TC 138L (96051018900), PRODUCT NO. 960 51 01-89
STEERING ASSEMBLY 41

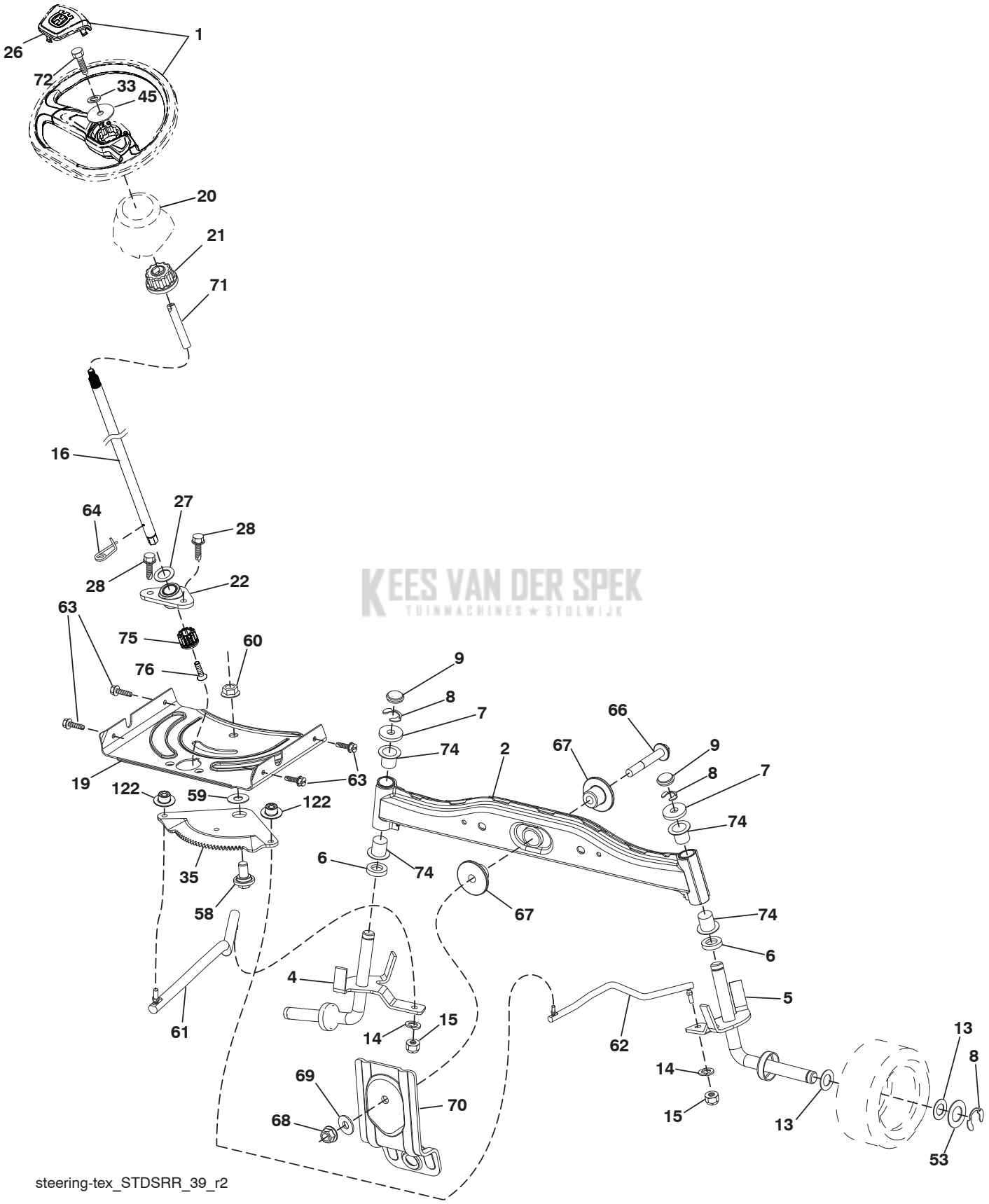

KEES VAN DER SPEK
TUINMACHINES ★ STOLWIJK

STEERING ASSEMBLY 41

KEY NO.	PART NO.	DESCRIPTION
1	597 86 61-01	Wheel, Steering Kit
2	532 41 81-68	Axle Asm.
4	532 40 30-87	Spindle Asm., LH
5	532 40 30-88	Spindle Asm., RH
6	532 00 62-66	Washer Thrust .75 x 1.230
7	532 12 17-48	Washer 25/32 x 1-5/8 x 16 Ga.
8	812 00 00-29	Ring, Klip #T5304-75
9	532 12 12-32	Cap, Spindle
13	532 12 17-49	Washer 25/32 x 1-1/4 x 16 Ga.
14	596 23 87-01	Washer Spring Lock .381 ID x .680
15	873 54 06-00	Nut, Crown Lock 3/8-24 unf
16	585 86 92-02	Steering Shaft
19	532 19 47-29	Plate Steering
20	532 44 14-25	Boot, Steering
21	532 18 67-37	Adapter, Wheel Steering
22	585 02 98-02	Bearing
26	594 94 91-01	Insert, Wheel Steering
27	596 93 34-01	Washer Plain
28	817 00 06-12	Screw 3/8-16 x 3/4
33	596 23 88-01	Washer Lock 5/16 Sqr End Zn
35	532 19 47-32	Gear, Sector Plate
45	596 04 00-01	Washer 11/32 x 2-3/8" CLR.Zn
53	532 18 89-67	Washer Hardened .793 x 1.637 x .060
58	532 19 47-47	Bolt Shoulder Sector Pivot CFM
59	532 19 47-48	Washer Thrust Sector Steering
60	873 97 10-00	Nut Flange Lock 5/8-11
61	597 04 78-02	Linkage Asm Draglink LH Raw
62	597 04 79-02	Linkage Asm Draglink RH Raw
63	817 00 05-12	Screw 5/16-18 x 3/4
64	532 19 98-49	Retainer Clip Spring Steering
66	871 02 07-48	Bolt Hex Fghd 7/16-14 x 3 Serr
67	532 19 47-37	Bushing PM Front Axle
68	873 90 07-00	Nut Lock Flange 7/16-14 Gr. 5
69	532 19 91-62	Washer 1.5 x .505 x .118
70	585 33 88-01	Bracket Deck Susp Front
71	532 19 07-52	Shaft Extension Steering
72	596 03 97-01	Bolt, Hex Head, 5/16-18 unc x 4" Gr. 5
74	532 00 33-66	Bearing Col Strg Blk
75	580 68 37-01	Bolt, Hex, 5/16-18 unc x 4 Gr. 5
76	580 68 36-01	Screw Head Sock
122	532 44 49-62	Cap Gear Sector
- -	589 31 60-01	Kit ID Box (Includes Key#'s 1, 20, 21, 26, 33, 45, 71, & 72). This kit also includes bagger parts (532 43 66-41 Full Bagger Lever); refer to pages 6 & 7 in this IPL, (873 90 04-00 Nut Hex Flange 1/4-20 unc), (532 42 16-14 Spring Latch Bagger), (817 49 04-12 Screw 1/4-20 x 3/4); refer to pages 18 & 19 in this IPL.

NOTE: All component dimensions given in U.S. inches
1 inch = 25.4 mm

TRACTOR - - MODEL NO. TC 138L (96051018900), PRODUCT NO. 960 51 01-89
MOWER DECK 44

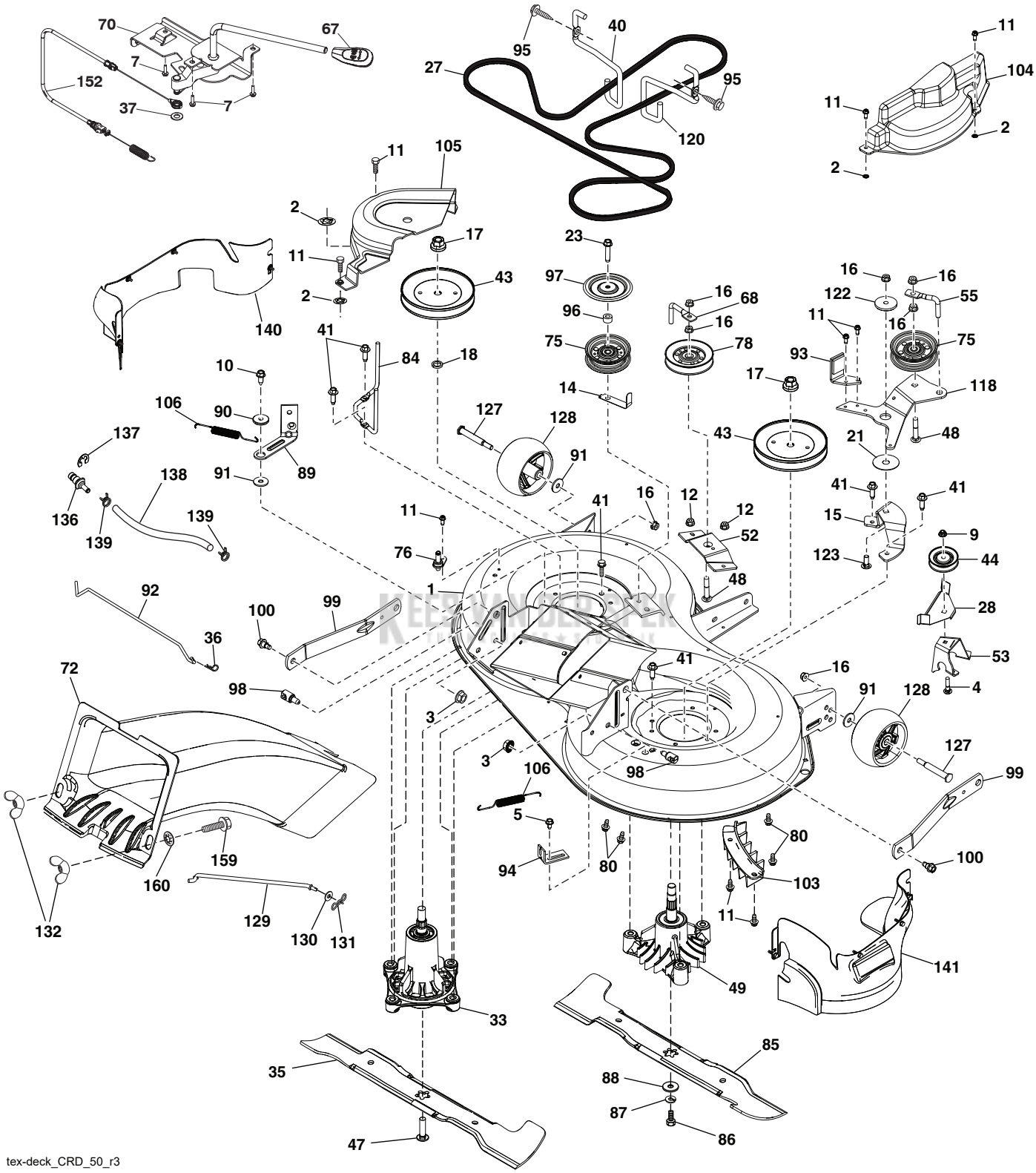

tex-deck_CRD_50_r3

TRACTOR - - MODEL NO. TC 138L (96051018900), PRODUCT NO. 960 51 01-89
MOWER DECK 44

KEY NO.	PART NO.	DESCRIPTION
1	592 97 00-01	SVC Weldment Kit
2	532 42 30-62	Palnut 1/4
3	596 13 57-01	Nut Lock PRVL Torq 5/16-18 x .68
4	872 11 05-10	Bolt Carriage 5/16-18 x 1-1/4 Gr. 5
5	817 00 05-10	Bolt 5/16-18
7	596 32 17-01	Screw #10 x 0.750 BOS Thread
9	585 69 13-01	Nut Hex Flg Nylock
10	817 00 06-16	Screw 3/8-16 x 1
11	532 13 77-29	Screw 1/4-20 x 5/8
12	594 94 44-01	Nut Hexagon Flange 5/16-18
14	532 15 60-85	Keeper Belt Idler
15	592 85 47-02	CRD Idler Arm Mount Bracket
16	873 90 06-00	Nut 3/8-16
17	596 13 48-01	Nut Hex 9/16-18 x 1.010
18	532 18 76-90	Washer Spacer Mandrel
21	532 17 85-15	Washer Flat Hardened
23	596 56 40-03	Bolt Hex 3/8-16 x 1.75 CLR Zinc
27	597 12 22-01	Belt 97 Manual
28	592 85 56-02	Keeper 97 CRD Angled Indler
33	587 81 97-01	Kit, Mandrel, Non Grease, Tall (includes mandrel and bolts)
35	532 42 79-84	Blade
36	532 00 44-97	Retainer Spring 1" Zinc/CAD
37	596 56 53-01	Washer 3/8 x 0.08 in. ST CLR ZN
40	532 19 72-58	Keeper Belt Engine LH
41	584 95 39-01	Bolt Hex WSHRHD .313-1/8 x 1.19
43	532 19 74-73	Pulley Mandrel
44	532 19 95-34	Pulley V-Idler GRND DR Plated
47	584 30 93-01	Screw LH Blade 7/16 x 1
48	596 13 63-01	Bolt, Cup, Head 3/8-16 x 2
49	532 16 55-79	Mandrel Asm., CRD, LH, Threads, SVC (includes bearing, housing, shaft, felt washer, nut, bolt, and washers.)
52	599 21 07-03	Bracket 97 CRD Center, Idler
53	595 09 81-03	Bracket V-Idler Bolt Angled
55	598 96 92-01	Clutching, Arm, Keeper, 97CRD
67	532 40 30-12	Handle Clutch Cable
68	598 90 38-02	Keeper, Belt
70	532 40 12-46	Clutch Asm Manual
72	582 03 56-01	Chute Upper
75	597 02 50-01	Pulley Idler Flat CLR ZN
76	532 43 96-40	Washout Port
78	532 17 39-02	Pulley Idler V-Gr. Plated 4.25
80	595 90 16-01	Bolt.Cup 5/16-18 x 3/4.CLR.Zinc
84	589 67 61-02	Keeper Belt Mandrel
85	532 42 79-85	Blade
86	532 18 17-13	Bolt 3/8-24 x 1.50
87	596 23 87-01	Washer Spring Lock 381ID x .680
88	532 14 02-96	Washer Hard Blade
89	532 43 81-24	Arm Brake
90	532 19 90-92	Space Retainer
91	596 13 49-01	Washer Plain 3/8 x 7/8
92	592 85 57-01	Rod Brake 97 CRD Link
93	592 85 49-02	Arm Brake
94	532 19 72-50	Bracket Clutch Cable
95	817 00 06-12	Screw Hexwsh 3/8-16 x 3/4
96	532 40 02-71	Spacer
97	532 18 20-61	Sheild Idler Mower
98	593 82 40-01	StudW/"D" Anti-Rotation
99	532 19 51-86	Arm Suspension
100	532 19 65-39	Bolt Shoulder
103	532 43 69-92	Guard Front Vent
104	592 84 81-01	Mandrel Cover RH
105	532 43 87-44	Mandrel Cover LH
106	532 19 32-16	Spring Brake Return
118	599 23 63-02	Arm Clutching
120	532 19 72-59	Keerper Belt Engine RH
122	532 16 57-23	Spacer Retainer Mower
123	596 98 75-01	Bolt 3/8x 1-1/4" Gr. 5 CLR ZN
127	596 43 44-04	Bolt Shoulder 3/8-16 x 3-5/8"
128	589 52 73-01	Wheel Gauge Rally
129	532 40 48-51	Rod Anti Sway
130	596 13 32-01	Washer 3/32 x 13/16 x 12 Ga.
131	532 19 42-08	Pin Cotter 5/16 Bow Tie Lock
132	532 17 88-99	Knob Handle
136	532 43 96-39	Washout Port Hookup
137	812 00 00-29	Ring Clip
138	532 44 07-43	Hose 3/8 Long 12"
139	596 86 74-01	Clamp Hose 3/8 Clear Zinc
140	501 57 94-01	Guard Asm LH
141	501 57 93-02	Gaurd Asm RH
152	532 44 04-88	Cable Clutch Manual w/Spring
159	872 14 06-14	Bolt 3/8-16 unc x 1-3/4
160	532 16 89-37	Nut Push
- -	596 55 13-01	Replacement Mower Complete

NOTE: All component dimensions given in U.S. inches
1 inch = 25.4 mm

KEES VAN DEN SIGT
ALL TOOL MACHINES & TOOLS

TRACTOR - - MODEL NO. TC 138L (96051018900), PRODUCT NO. 960 51 01-89
MOWER LIFT 45

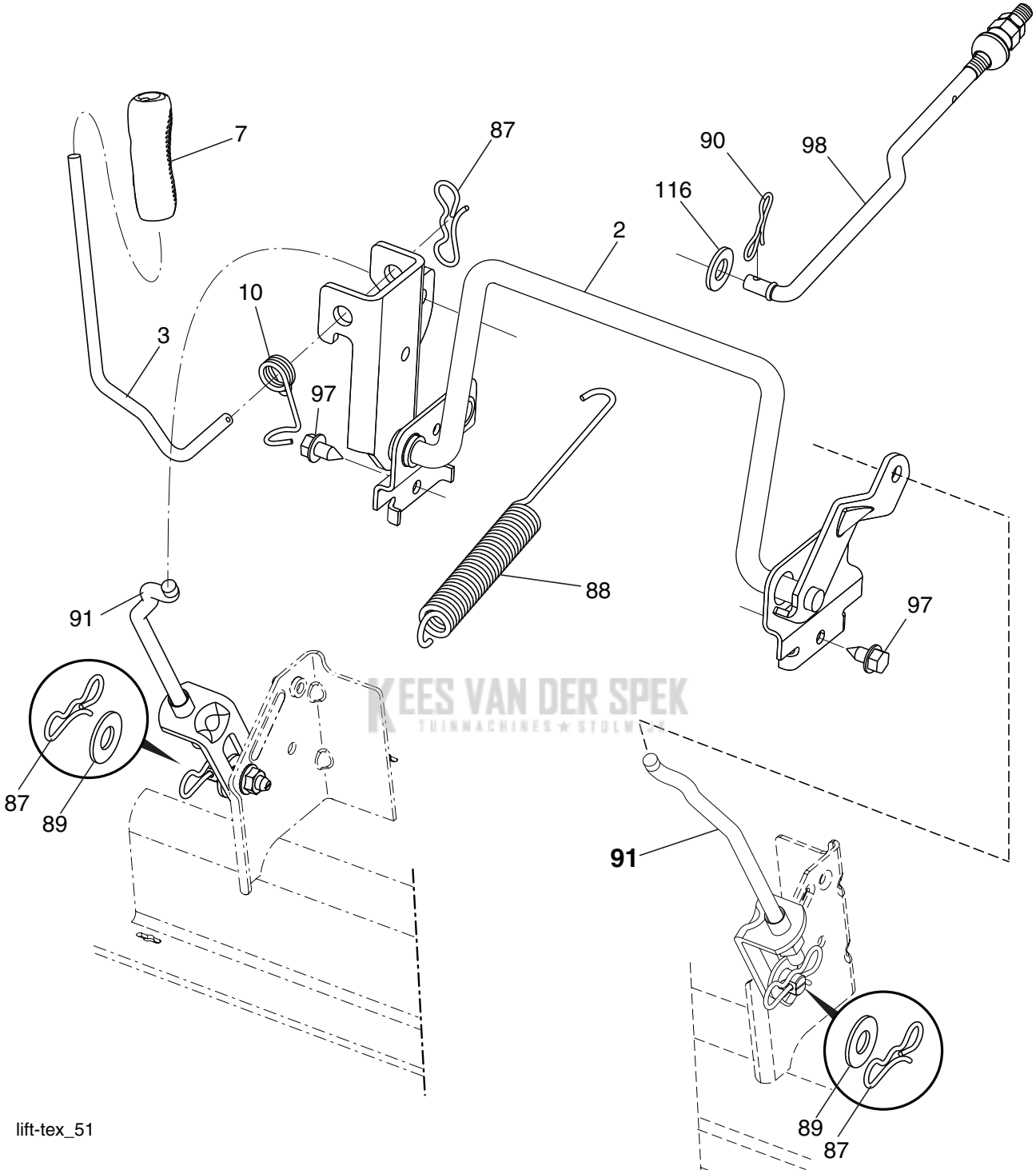

KEES VAN DER SPEK
TUINMACHINES ★ STOLWIJK

KEY NO.	PART NO.	DESCRIPTION
2	532 43 69-96	Deck Lift
3	594 01 80-01	Lever Lift Handle
7	580 96 23-01	Grip, Lever
10	532 19 63-14	Spring Torsion
87	532 19 42-09	Pin Cotter 7/16 Bow Tie Lock
88	532 44 54-96	Spring Lift Assist
89	819 19 19-12	Washer 17/32 x 1-3/16 x 12 Ga.
90	532 19 42-08	Pin Cotter 5/16 Bow Tie Lock
91	589 46 48-04	Link Assy Lift Rear
97	596 56 40-01	Hex Bolt W/Collar 3/8-16 x 0.53
98	581 50 69-06	Link Assy Front MWR SUSP
116	594 97 65-01	Washer Round 5/32 x 15/16 x .065

NOTE: All component dimensions given in U.S. inches
1 inch = 25.4 mm

SEAT ASSEMBLY 42

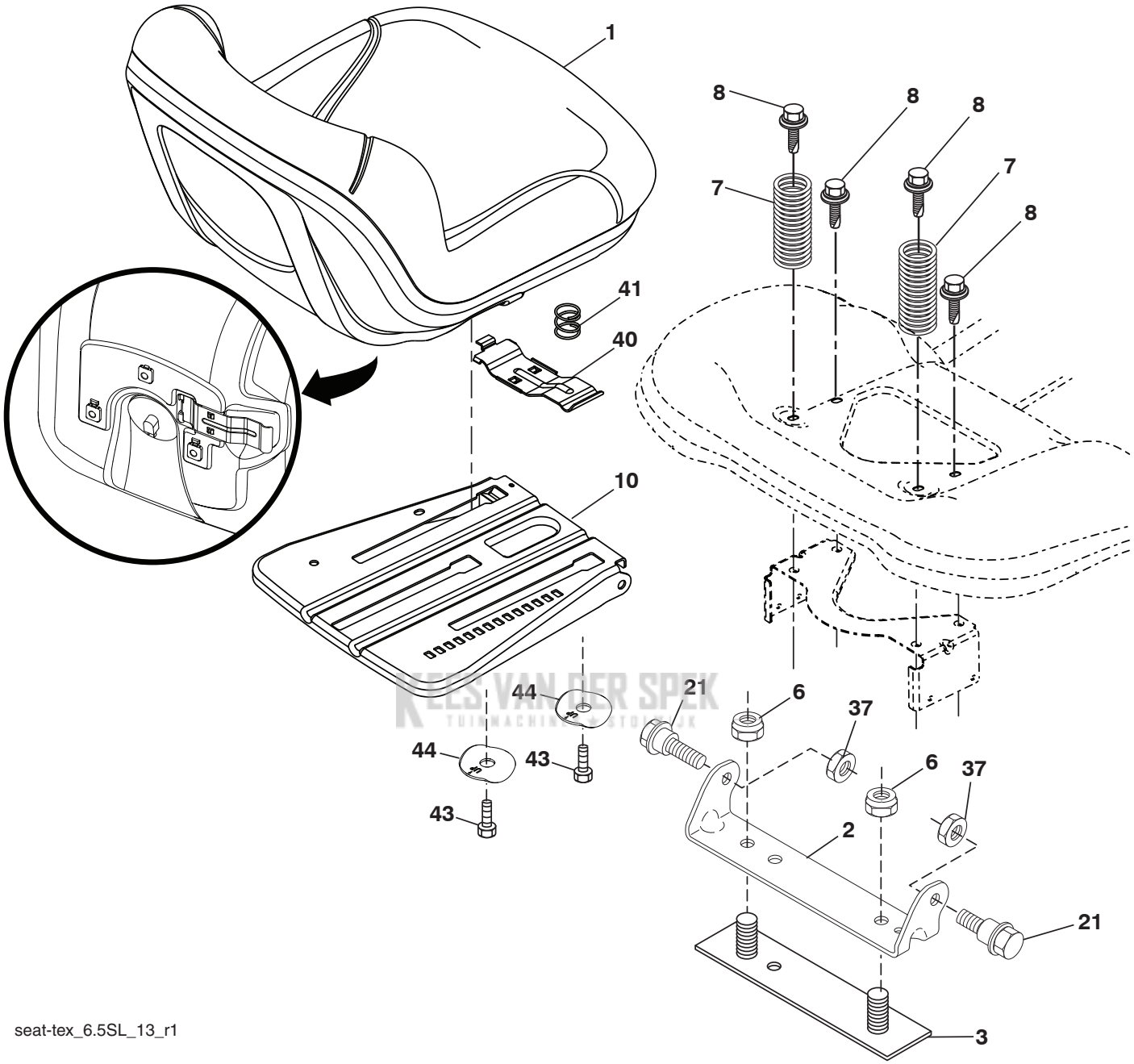

KEY NO.	PART NO.	DESCRIPTION
1	532 43 98-19	Seat
2	532 18 01-66	Bracket Pivot Fender
3	532 14 06-75	Strap, Asm. Fender
6	873 80 06-00	Nut, Lock w/Ins. 3/8-16 unc
7	589 48 35-01	Spring, Seat Cprsn.
8	532 17 18-77	Bolt 5/16-18 unc x 3/4 w/Sems.
10	596 65 74-02	Pan, Seat PLate
21	587 90 78-01	Bolt, Shoulder 5/16-18 x 5/8
37	596 58 37-02	Nut w/Nonmetal INS BLK Zinc
40	532 19 76-61	Handle
41	532 19 82-00	Spring
43	874 76 06-12	Bolt 3/8-16 unc x 3/4
44	501 05 18-01	Washer, Winged

NOTE: All component dimensions given in U.S. inches
1 inch = 25.4 mm

TRACTOR - - MODEL NO. TC 138L (96051018900), PRODUCT NO. 960 51 01-89
BAGGER 46

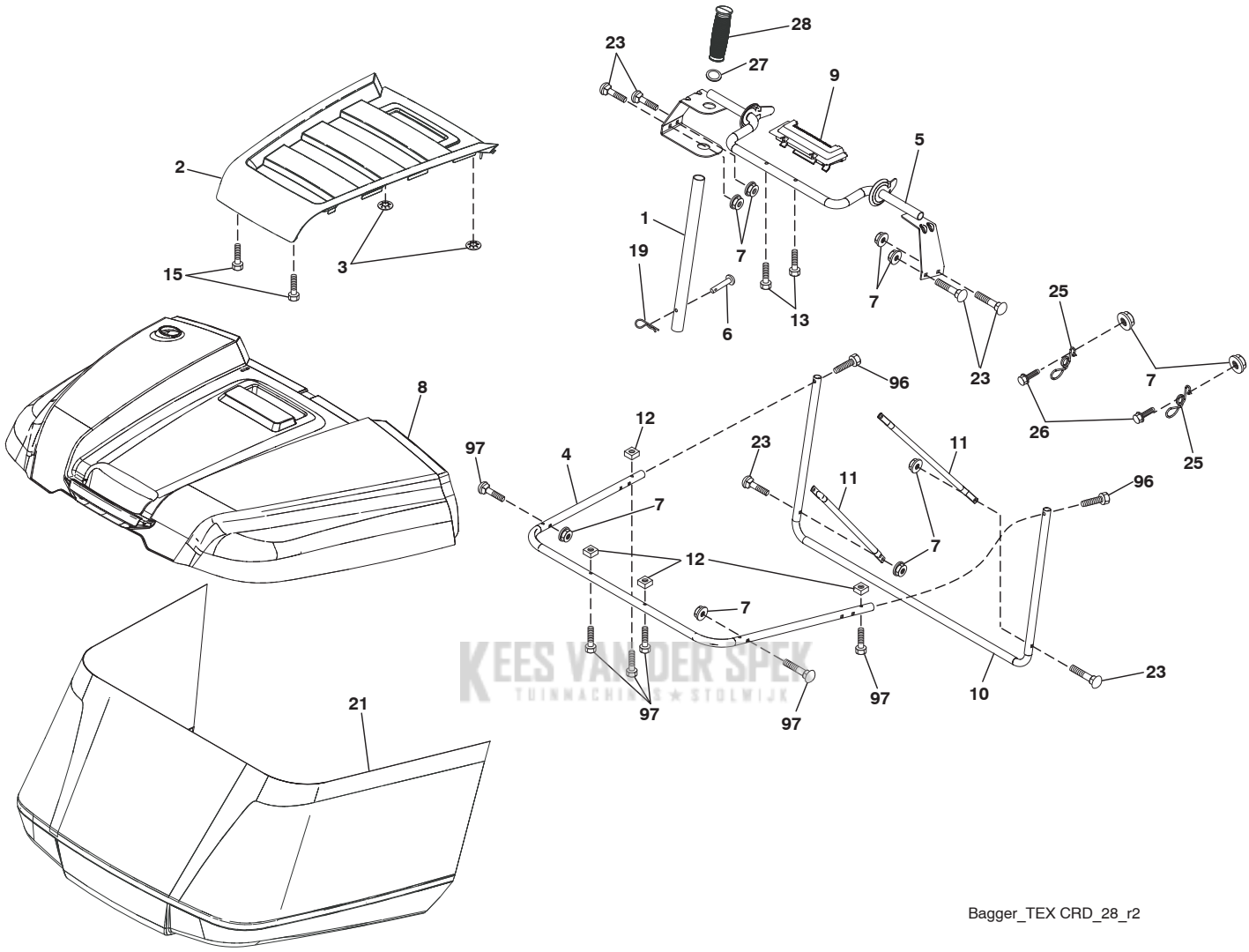

KEES VAN DER SPEK
TUINMACHINES ★ STOLWIJK

KEY NO.	PART NO.	DESCRIPTION
1	532 42 86-10	Tube Handle Bagger
2	532 44 13-58	Applique
3	532 41 38-08	Nut Push .156
4	579 78 54-01	Frame Asm Bagger Top
5	532 41 76-32	Frame Asm Top Bagger
6	532 12 68-75	Rivet Drilled
7	873 90 04-00	Nut Hex Flange 1/4-20 unc
8	532 44 12-61	Cover Bagger
9	532 41 76-29	Insert Handle Bagger
10	532 43 67-70	Frame Front
11	532 43 67-71	Tubing Brace Bagger
12	532 42 17-93	Nut Square 1/4
13	532 42 17-80	Screw 1/4 x 1.150
15	532 42 18-01	Screw #8 Dlat Head Drill Tip
19	532 19 42-08	Cotter Pin 5/16 Bow Tie
21	532 44 83-06	Bag Asm
23	872 04 04-10	Bolt Carr. 1/4-20
25	532 42 16-14	Spring Latch Bagger
26	817 49 04-12	Screw 1/4-20 x 3/4
27	532 42 12-62	Grommet Rubber
28	532 16 57-87	Grip Handle Black
96	501 40 66-01	Screw Hex Cap 1/4-20 x 1.500
97	590 10 57-01	Screw Torx Butn HD 1/4-20-1.5"

NOTE: All component dimensions given in U.S. inches
1 inch = 25.4 mm

KEES VAN DER SPEK
TUINMACHINES ★ STOLWIJK

KEES VAN DER SPEK
TUINMACHINES ★ STOLWIJK