Parts List No. 967148101		McCULLOCH® PARTS LIST	MODEL CSE 2040
Date 5/19/14	Replaces 3/7/14	**NOTE :** Illustration may differ from actual model due to design changes.	**Page:** 1

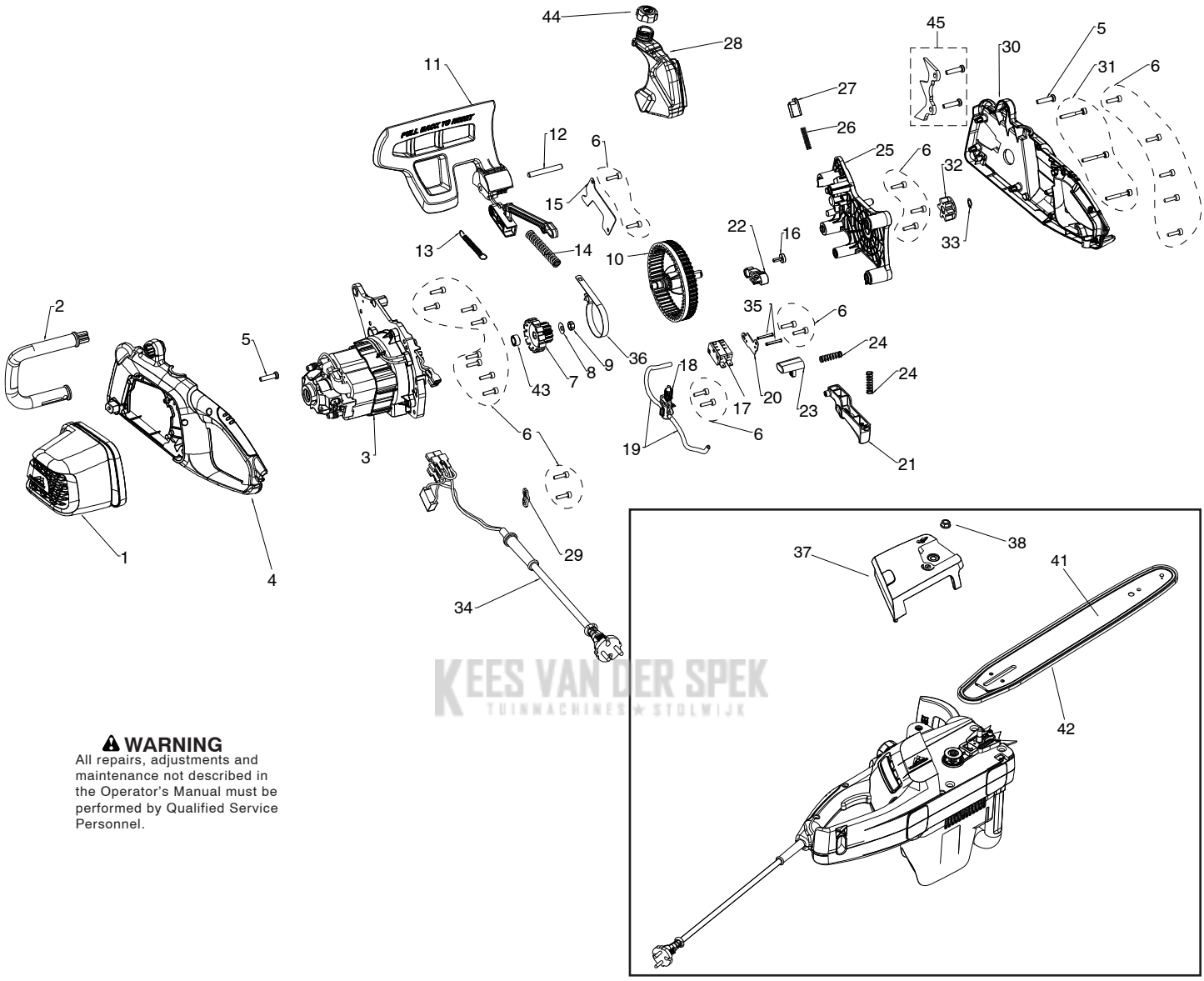

KEES VAN DER SPEK
TUINMACHINES ★ STOLWIJK

⚠ WARNING
All repairs, adjustments and maintenance not described in the Operator's Manual must be performed by Qualified Service Personnel.

Ref.	Part No.	Description	Ref.	Part No.	Description	Ref.	Part No.	Description
1	581126701	Cover, Motor	22	579044001	Lever, Switch	42 ✓	577615126	Saw Chain, 16 In.
2	581126901	Handle, Front	23	581132801	Lock, Trigger	43	586628301	Spacer
3	579044904	Motor Assy	24	530042091	Spring	44	586873701	Tank Cap Assy
4	581126601	Housing, Left	25	581006501	Bearing Housing Assy	45	586873601	Spike Kit
5	530016432	Screw	26	545071201	Spring. Handguard Position			
6	530016449	Screw						
7	579043101	Pinion	27	580637501	Catch, Hand Guard			
8	586555801	Disc Spring	28	580977802	Tank Assy (Incl. 44)			
9	574594401	Nut	29	579715501	Cord Bracket			
10	579658801	Gear Assy	30	581126501	Housing, Right			
11	579590001	Link Assy, Chain Brake	31	530016448	Screw			
12	579045302	Pin, Hand Guard	32	579045701	Sprocket			
13	579044301	Spring, Coast Brake	33	530042090	Retaining Ring			
14	579589801	Spring, Brake	34	579663703	Cord			
15	579044801	Plate, Brake Spring	35	586082401	Pin			
16	579598601	Screw, Retaining	36	579044701	Brake Band			
17	586072201	Micro Switch	37 ✓	585638303	Cover, Bar - Tooled			
18	579043901	Oil Pump	38	530015917	Nut, Bar			
19	579044101	Oil Hose	39	--	--			
20	586073401	Plate, Switch	40	--	--			
21	581132701	Trigger	41 ✓	577614331	Bar, 16 In.			

✓ = New Part Number For This IPL