GARDENA®

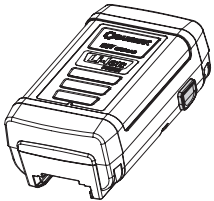

Li-Ion 18 V / 2,6 Ah Art. 8835
Li-Ion 18 V / 1,6 Ah Art. 8839
Li-Ion 25 V / 3,0 Ah Art. 8838

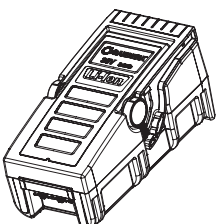

Li-Ion 36 V / 3,0 Ah Art. 8836
Li-Ion 36 V / 4,5 Ah Art. 8837

DE	**Betriebsanleitung** Wechselaccu
EN	**Operating Instructions** Replacement Battery
FR	**Mode d'emploi** Batterie remplaçable
NL	**Gebruiksaanwijzing** Wisselaccu
SV	**Bruksanvisning** Utbytes Batteri
DA	**Brugsanvisning** Batteri
FI	**Käyttöohje** Vara-akku
NO	**Bruksanvisning** Utbyttbart Batteri
IT	**Istruzioni per l'uso** Batteria di ricambio
ES	**Instrucciones de empleo** Batería de sustitución
PT	**Manual de instruções** Acumulador de substituição
PL	**Instrukcja obsługi** Akumulator
HU	**Használati utasítás** Csereakkumulátor
CS	**Návod k obsluze** Náhradní akumulátor
SK	**Návod na obsluhu** Náhradný akumulátor
EL	**Οδηγίες χρήσης** Ανταλλακτική μπαταρία
RU	**Инструкция по эксплуатации** Батарея сменная
SL	**Navodilo za uporabo** Nadomestni akumulator
HR	**Uputa za upotrebu** Zamjenska accu baterija
SR / BS	**Upustvo za korisnike** Rezervna punjiva baterija
UK	**Інструкція з експлуатації** Змінний акумулятор
RO	**Instrucțiuni de utilizare** Baterie rezervă
TR	**Kullanma Kılavuzu** Değiştirilebilir Batarya
BG	**Инструкция за експлоатация** Сменяеми батерии
SQ	**Manual përdorimi** Akumulator këmbyes
ET	**Kasutusjuhend** Vahetusaku
LT	**Naudojimosi instrukcija** Keičiamas akumuliatorius
LV	**Lietošanas instrukcija** Maināmais akumulators

KLUS VOOR SPEK
HET HANDIGE TOOLWIJK

Li-Ion 18 V / 2,6 Ah (Art. 8835)

Li-Ion 18 V / 1,6 Ah (Art. 8839)

Li-Ion 25 V / 3,0 Ah (Art. 8838)

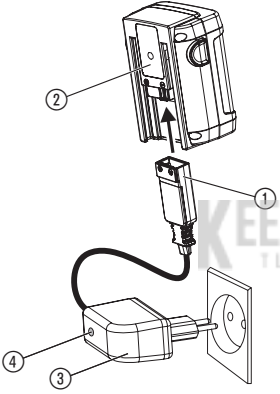

Li-Ion 36 V / 3,0 Ah (Art. 8836)

Li-Ion 36 V / 4,5 Ah (Art. 8837)

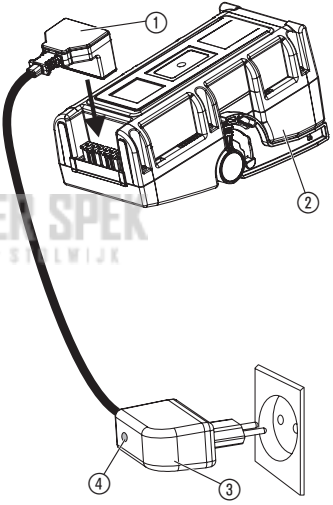

KEES VAN DER SPEK
TUINMACHINES ★ SPIJKWIJK

Li-Ion 18 V / 2,6 Ah (Art. 8835)

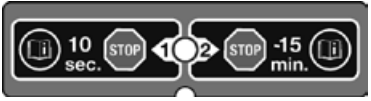

GARDENA Replacement Battery Li-Ion 18 V / 25 V / 36 V Battery

Translation of the original German operating instructions.

Please read these operating instructions carefully and observe the notes given. Acquaint yourself with the use of the battery, the charging technology (see operating instructions GARDENA Rechargeable Battery unit) and observe the safety instructions.

For safety reasons, children under the age of 16 as well as people, who are not acquainted with the instructions should not use the battery. Persons with reduced physical or mental abilities may use the product only if they are supervised or instructed by a responsible person. Children must be supervised to ensure that they do not play with the product. Never operate the product when you are tired, ill or under the influence of alcohol, drugs or medicine.

→ Please keep these operating instructions in a safe place.

1. Area of application of your GARDENA Replacement Battery

Proper use as directed:
The rechargeable battery is used as a power supply for the relevant GARDENA cordless appliances and is intended for use in private house and hobby gardens. The replacement battery must not be used in public facilities, parks, sports grounds, next to roads or in agriculture or forestry. Observance of the operating instructions provided by GARDENA is a prerequisite for correct use of the rechargeable battery.

2. Safety Instructions

→ Please observe the safety instructions on the battery.

FIRE RISK! Short-circuit!

→ **Do not bridge the contacts of the battery with metal components.**

Check your replacement battery before each use:
Visually check the battery before each use. A damaged battery must be disposed of and must not be posted or transported.

Use / responsibility:
Attention! For risks of injury the battery must not be used as power source for other devices. Only use the battery for the GARDENA appliances intended.

Electrical safety:

FIRE RISK!

→ **The battery to be charged must be placed on a non-flammable, heat resistant and non-conductive surface while charging.**
Keep corrosive, flammable and easily combustible objects clear of the battery charger and the battery.
Do not cover the battery charger and the battery while charging.
Unplug the battery charger immediately in the event of smoke formation or fire.

Only original GARDENA Charger Units may be used for charging.
The use of other battery chargers may damage the batteries irreparably and even cause a fire.

RISK OF EXPLOSION!

Protect batteries from heat and fire. Do not leave on radiators or expose to strong sunshine for long periods.

Only use and charge the battery in ambient temperatures of between 5 °C and 45 °C. Allow battery to cool down after long periods of use (cooling time up to 1 hr.). An excessively hot battery cannot be charged.

The charging cable should be checked regularly for signs of damage or ageing (brittleness) and may only be used if it is in perfect condition.

Storage:
Do not store the battery above 45 °C or in direct sunlight. Ideally, the battery should be stored below 25 °C so that self-discharge is low. Never store while still attached to a tool, this prevents misuse and accidents.

Do not store the battery in places where static electricity is present.

Warning! This machine produces an electromagnetical field during operation. This field may under some circumstances interfere with active or passive medical implants. To reduce the risk of serious or fatal injury, we recommend persons with medical implants to consult their physician and the medical implant manufacturer before operating this machine. Do not use the product when a thunderstorm is approaching.

Danger! Small parts could be swallowed during assembly and there is a risk of suffocation from the polybag. Keep infants away during assembly.

3. Initial Operation

Charging the battery (see page 2):

ATTENTION!

Overvoltage damages batteries and the battery charger.

→ Ensure the correct mains voltage.

Before using for the first time, the battery must be fully charged.

The lithium-ion battery can be charged in any state of charge and the charging process can be interrupted at any time without harming the battery (no memory effect).

1. Plug the plug of the charger cable ① into the battery ②.
2. Plug standard charger ③ into a mains power socket.

Charging control lamp ④ is lit red:
Battery is being charged.

Charging control lamp ④ is lit green:
Battery is fully charged.
(For charging time, see 7. Technical Data).

Check the charge status regularly while charging.

3. Once completely charged, disconnect the battery ② from the battery charger ③. Disconnect the battery ② from the battery charger ③ first, then unplug the battery charger ③.

4. Storage

Storage / overwintering:
The battery must be stored out of the reach of children.

1. Charging the battery.
2. Store the battery in a dry place.

Li-ion *Disposal of batteries:*
The GARDENA battery contains lithium-ion cells that should not be discarded with normal household waste at the end of their life.

Important:
Please return the lithium-ion batteries to your GARDENA dealer or dispose of them properly at a public recycling centre.

1. Discharge lithium-ion cells completely.
2. Dispose of lithium-ion cells properly.

5. Maintenance

Make sure the surface and the contacts of the battery always are clean and dry before connecting the charging unit. When dirty clean them with a soft, dry rag; never use running water.

6. Troubleshooting

Error messages of the error-LED (see page 2) Art. 8835.

Problem	Possible Cause	Remedy
Device stops and the error-LED flashes.	**1.** Battery Overload.	Wait 10 sec.When the warning LED doesn't flash, start again.
	2. High temperature. The allowed operation temperature was exceded.	Wait approx.15 min. When the warning LED doesn't flash, start again.
Device stops and the warning-LED doesn't flash.	Battery is discharged.	Charge the Battery.

In the event of faults, please contact GARDENA Service.
Repairs must only be carried out by GARDENA service departments or specialist dealers authorised by GARDENA.

7. Technical Data

	Art. 8839	Art. 8835	Art. 8838	Art. 8836	Art. 8837
Battery voltage	**Li-Ion 18 V**	**Li-Ion 18 V**	**Li-Ion 25 V**	**Li-Ion 36 V**	**Li-Ion 36 V**
Battery capacity	1.6 Ah	2.6 Ah	3.0 Ah	3.0 Ah	4.5 Ah
Approx. charging time* 90 % full:	2 hrs	3.5 hrs	5 hrs	4.5 hrs	7.5 hrs
Approx. charging time* 100 % full:	5 hrs	7 hrs	11 hrs	9 hrs	15 hrs

* Charging time with standard charger

With the Quick Battery Charger art. 8831 available as an accessory from GARDENA, the batteries can be charged up to 3 times faster.

KEES VAN DER SPEK TUINMACHINE & GASTRO | JK

8. Service / Warranty

Service: Please contact the address on the back page.

Warranty: In the event of a warranty claim, no charge is levied to you for the services provided. GARDENA Manufacturing GmbH offers a two-year warranty (effective as of the date of purchase) for this product. This warranty includes all significant defects of the product that can be proved to be material or manufacturing faults. This warranty is fulfilled by supplying a fully functional replacement product or by repairing the faulty product sent to us free of charge; we reserve the right to choose between these options. This service is subject to the following provisions:

- The product was used for its intended purpose as per the recommendations in the operating instructions.
- Neither the purchaser nor a third party has attempted to repair the product.

This manufacturer's warranty does not affect warranty entitlements against the dealer/retailer. If problems arise with this product, please contact our Service department or send the defective product along with a brief description of the fault to GARDENA Manufacturing GmbH, making sure to have sufficiently covered any shipping costs and to have followed the relevant postage and packaging guidelines. A warranty claim must be accompanied by a copy of the proof of purchase.

VAN DER SPEK
TUINMACHINES ★ STOLWIJK

Product Liability

In accordance with the German Product Liability Act, we hereby expressly declare that we accept no liability for damage incurred from our products where said products have not been properly repaired by a GARDENA-approved service partner or where original GARDENA parts or parts authorised by GARDENA were not used.

DE EU-Konformitätserklärung

Der Unterzeichner, Husqvarna AB, 561 82 Huskvarna, Schweden, bescheinigt hiermit, dass die nachstehend aufgeführten Geräte bei Verlassen des Werks die harmonisierten EU-Leitlinien, EU-Normen für Sicherheit und besondere Normen erfüllen. Dieses Zertifikat verliert seine Gültigkeit, wenn die Geräte ohne unsere Genehmigung verändert werden.

EN EC Declaration of Conformity

The undersigned, Husqvarna AB, 561 82 Huskvarna, Sweden, hereby certifies that, when leaving our factory, the units indicated below are in accordance with the harmonised EU guidelines, EU standards of safety and product specific standards. This certificate becomes void if the units are modified without our approval.

FR Déclaration de conformité CE

Le constructeur, soussigné : Husqvarna AB, 561 82 Huskvarna, Suède, déclare qu'à la sortie de ses usines le matériel neuf désigné ci-dessous était conforme aux prescriptions des directives européennes énoncées ciaprès et conforme aux règles de sécurité et autres règles qui lui sont applicables dans le cadre de l'Union européenne. Toute modification apportée à cet appareil sans notre accord annule la validité de ce certificat.

NL EG-conformiteitsverklaring

De ondergetekende, Husqvarna AB, 561 82 Huskvarna, Zweden, verklaart hierbij dat de producten die hieronder staan vermeld, wanneer ze onze fabriek verlaten, in overeenstemming zijn met de geharmoniseerde Europese richtlijnen, EU-normen voor veiligheid en productspecifieke normen. Dit certificaat vervalt als de producten worden aangepast zonder onze toestemming.

SV EG-försäkran om överensstämmelse

Undertecknad firma Husqvarna AB, 561 82 Huskvarna, Sverige, intygar härmed att nedan nämnda produkter, när de lämnar vår fabrik, överensstämmer med EU:s riktlinjer, EU:s säkerhetsstandarder och produktspecifika standarder. Detta intyg skall ogiltigförklaras om produkten ändras utan vårt godkännande.

DA EU-overensstemmelseserklæring

Undertegnede, Husqvarna AB, 561 82 Huskvarna, Sverige erklærer hermed, at nedenfor anførte enheder er i overensstemmelse med de harmoniserede EUretningslinjer, EU-standarder for sikkerhed og produktspecifikke standarder, når de forlader fabrikken. Denne erklæring ugyldiggøres, hvis enhederne ændres uden vores godkendelse.

FI EY-vaatimustenmukaisuusvakuutus

Husqvarna AB, 561 82 Huskvarna, Ruotsi, vakuuttaa täten, että alla mainitut laitteet ovat tehtaalta lähtiessään yhdenmukaistettujen EU-säännösten, EU:n turvastandardien ja tuotekohtaisten standardien mukaisia. Tämä vakuutus mitätöityy, jos laitteita muokataan ilman hyväksyntäämme.

IT Dichiarazione di conformità CE

La sottoscritta Husqvarna AB, 561 82 Huskvarna, Svezia, certifica che il prodotto qui di seguito indicato, nei modelli da noi commercializzati, è conforme alle direttive armonizzate UE nonché agli standard di sicurezza UE e agli standard specifici di prodotto. Qualunque modifica apportata al prodotto senza nostra specifica autorizzazione invalida la presente dichiarazione.

ES Declaración de conformidad CE

El abajo firmante, Husqvarna AB, 561 82 Huskvarna, Suecia, certifica por la presente que, cuando salen de la fábrica, las unidades indicadas a continuación cumplen las normas de armonización de la UE, las normas de la UE sobre seguridad y las normas específicas del producto. Este certificado quedará sin efecto si se modifican las unidades sin nuestra autorización.

PT Declaração de conformidade CE

O abaixo-assinado, Husqvarna AB, 561 82 Huskvarna, Suécia, certifica por este meio que, ao sair da nossa fábrica, as unidades indicadas acima estão em conformidade com as diretrizes uniformizadas da UE, os padrões de segurança da UE e os padrões específicos do produto. Este certificado deixa de ser válido se as unidades forem modificadas sem a nossa aprovação.

PL Deklaracja zgodności WE

Niżej podpisany przedstawiciel firmy Husqvarna AB, 561 82 Huskvarna, Szwecja, niniejszym oświadcza, że podane poniżej wyroby opuszczające fabrykę są zgodne ze zharmonizowanymi normami UE oraz z obowiązującymi w UE przepisami bezpieczeństwa i normami dotyczącymi danego produktu. Modyfikacja wyrobów bez naszej zgody powoduje unieważnienie niniejszego certyfikatu.

HU EK megfelelőségi nyilatkozat

Alulírott Husqvarna AB, 561 82 Huskvarna, Svédország ezzel tanúsítja, hogy az alábbiakban leírt egységek a gyár elhagyásakor megfeleltek a harmonizált uniós előírásoknak és biztonsági és termékspecifikus szabványoknak. Ez a tanúsítvány érvényét veszti, ha az egységeket jóváhagyásunk nélkül átalakítják.

KEES VAN DER SPEK
TUINMACHINES & SERVICE

CS Prohlášení o shodě ES

Níže uvedená společnost Husqvarna AB, 561 82 Huskvarna, Švédsko, tímto potvrzuje, že při opuštění naší továrny jsou jednotky uvedené níže v souladu s harmonizovanými pokyny EU, standardy EU ohledně bezpečnosti a specifickými produktovými standardy. Tento certifikát pozbývá platnosti, pokud dojde k úpravě jednotek bez našeho schválení.

SK EÚ vyhlásenie o zhode

Dolu podpísaná spoločnosť Husqvarna AB, 561 82 Huskvarna, Švédsko týmto osvedčuje, že nižšie uvedené jednotky boli v súlade s harmonizovanými usmerneniami EÚ, normami EÚ v oblasti bezpečnosti a špecifickými normami týkajúcimi sa produktu v čase opustenia výrobného závodu. Toto osvedčenie stráca platnosť, ak boli jednotky zmenené bez nášho súhlasu.

EL Δήλωση Συμμόρφωσης ΕΚ

Η υπογεγραμμένη εταιρεία, Husqvarna AB, 561 82 Huskvarna, Σουηδία, πιστοποιεί ότι, κατά την έξοδο από το εργοστάσιο, οι μονάδες που αναφέρονται κατωτέρω συμμορφώνονται με τις εναρμονισμένες οδηγίες ΕΕ, τα πρότυπα ασφαλείας της ΕΕ και τα συγκεκριμένα πρότυπα προϊόντος. Αυτό το πιστοποιητικό καθίσταται άκυρο εάν οι μονάδες έχουν τροποποιηθεί χωρίς την έγκρισή μας.

SL Izjava ES o skladnosti

Spodaj podpisana, Husqvarna AB, 561 82 Huskvarna, Švedska, s to izjavo potrjuje, da je bila spodaj navedena enota ob izhodu iz tovarne skladna z usklajenimi smernicami EU, standardi EU za varnost in standardi, specifičnimi za izdelek. Izjava postane neveljavna v primeru neodobrene spremembe enote.

HR Izjava o usklađenosti EZ

Niže potpisana Husqvarna AB, 561 82 Huskvarna, Švedska, ovime potvrđuje kako su u nastavku navedene jedinice prilikom napuštanja tvornice bile u skladu s usklađenim smjernicama EU, EU sigurnosnim standardima i standardima specifičnima za proizvod. Ova certifikacija poništava se ako se jedinice izmjenjuju bez odobrenja.

RO Declarație de conformitate CE

Subscrisa, Husqvarna AB, 561 82 Husqvarna, Suedia, certifică prin prezenta că, la momentul ieşirii din fabrica noastră, unitățile indicate mai jos sunt în conformitate cu directivele UE armonizate, cu standardele UE de siguranță şi cu standardele specifice ale produsului. Prezentul certificat devine nul dacă unitățile sunt modificate fără aprobarea noastră.

BG Декларация за съответствие на ЕО

С настоящото долуподписаната, Husqvarna AB, 561 82 Huskvarna, Швеция, удостоверява, че при напускане на фабриката модулите, посочени по-долу, са в съответствие с хармонизираните директиви на ЕС, стандартите на ЕС за безопасност и специфичните за продукта стандарти. Този сертификат става невалиден, ако модулите са променени без нашето одобрение.

ET EÜ vastavusdeklaratsioon

Allakirjutanu Husqvarna AB, 561 82 Huskvarna, Rootsi, kinnitab käesolevaga, et tehasest väljumisel vastavad allpool nimetatud seadmed harmoneeritud EL-i suunistele, EL-i ohutusstandarditele ja tootele eriomastele standarditele. See vastavuskinnitus kaotab kehtivuse, kui seadet muudetakse ilma meie heakskiiduta.

LT EB atitikties deklaracija

Husqvarna AB, 561 82 Huskvarna, Sweden, garantuoja, kad iš gamyklos siunčiami toliau nurodyti įrenginiai atitinka suderintus EB reikalavimus, EB saugos ir konkretaus gaminio standartus. Pakeitus gaminį be mūsų patvirtinimo, nutraukiamas šio sertifikato galiojimas.

LV EK atbilstības deklarācija

Uzņēmums Husqvarna AB, 561 82 Huskvarna, Zviedrija, ar parakstu apliecina, ka tālāk minētās vienības, pametot rūpnīcu, atbilst saskaņotajām ES vadlīnijām, ES drošības standartiem un izstrādājumam specifiskajiem standartiem. Šis sertifikāts tiek anulēts, ja šīs vienības tiek modificētas bez mūsu apstiprinājuma.

KEES VAN DER DOEK TUINMACHINES & STOLWIJK

Bezeichnung der Geräte:	**Wechselaccu**
Description of the units:	**Replacement Battery**
Désignation du matériel :	**Batterie remplaçable**
Omschrijving van de apparaten:	**Wisselaccu**
Produktbeskrivning:	**Utbytes Batteri**
Beskrivelse af produktet:	**Batteri**
Laitteiden nimitys:	**Vara-akku**
Descrizione dei prodotti:	**Batteria di ricambio**
Descripción de la mercancía:	**Batería de sustitución**
Descrição dos aparelhos:	**Acumulador de substituição**
Nazwa urządzenia:	**Akumulator**
A készülékek megnevezése:	**Csereakkumulátor**
Označení přístrojů:	**Náhradní akumulátor**
Označenie zariadenia:	**Náhradný akumulátor**
Ονομασία της συσκευής:	**Ανταλλακτική μπαταρία**
Opis naprave:	**Nadomestni akumulator**
Oznaka uređaja:	**Zamjenska accu baterija**
Descrierea articolelor:	**Baterie rezervă**
Обозначение на уредите:	**Сменяеми батерии**
Seadmete nimetus:	**Vahetusaku**
Prietaisų pavadinimas:	**Keičiamas akumuliatorius**
Iekārtu apzīmējums:	**Maināmais akumulators**

Typ:		Art.-Nr.:	
Type:		Art. No.:	
Type :		Référence :	
Typ:		Art.nr.:	
Typ:		Art.nr.:	
Type:		Art. nr.:	
Tyyppi:		Tuoten:o	
Modello:		Art.:	
Tipo:		Art. No:	
Tipo:		Art. no:	
Typ:		Nr artykułu:	
Típusok:		Cikkszám:	
Typ:		Číslo artiklu:	
Typ:		Art.:	
Τύποι:		Αριθ. είδους:	
Tip:		Art št.:	
Tipovi:		br. art.	
Tip:		Nr art.:	
Тип:		Арт. номер:	
Mudel:		Toote nr:	
Tipas:	**Li-Ion 25 V / 3,0 Ah**	Gaminio nr.:	
Modelis:		Izstr.:	**Art. 8838**

Hinterlegte Dokumentation:
GARDENA Technische Dokumentation,
M. Kugler, 89079 Ulm

Deposited Documentation:
GARDENA Technical Documentation,
M. Kugler, 89079 Ulm

Documentation déposée:
Documentation technique GARDENA,
M. Kugler, 89079 Ulm

KEES VAN DER SPEK
TUINMACHINES STOLWIJK

Harmonisierte EN:

Batterie / Battery:

IEC 62133

Ladegerät / Battery charger (4025-00.640.00):

EN ISO 12100
EN 60335-1
EN 60335-2-29

EU-Richtlinien:
EU directives:
Directives européennes :
EU-richtlijnen:
EU directiv:
EU Retningslinier:
EY-direktiivit:
Direttive UE:
Normativa UE:
Directrizes da UE:
Dyrektywy Unii Europejskiej:

EU-irányelvek:
Směrnice EU:
EU-Predpisy:
Οδηγίες της ΕΕ:
ES-smernice:
EU smjernice:
Directive UE:
ЕС-директиви:
ELi direktiivid:
ES direktyvos:
ES-direktīvas:

2014/35/EG
2014/30/EG
2011/65/EG

Anbringungsjahr der CE-Kennzeichnung:
Year of CE marking:
Année d'apposition du marquage CE :
Installatiejaar van de CE-aanduiding:
Märkningsår:
CE-Mærkningsår:
CE-merkin kiinnitysvuosi:
Anno di applicazione della certificazione CE:
Colocación del distintivo CE:
Ano de marcação pela CE:
Rok nadania oznakowania CE:

CE-jelzés elhelyezésének éve:
Rok umístění značky CE:
Rok udelenia značky CE:
Έτος σήματος CE:
Leto namestitve CE-oznake:
Godina dobivanja CE oznake:
Anul de marcare CE:
Година на поставяне на CE-маркировка:
CE-märgistuse paigaldamise aasta:
Metai, kada pažymėta CE-ženklu:
CE-marķējuma uzlikšanas gads:

2008

Ulm, den 12.05.2016
Ulm, 12.05.2016
Fait à Ulm, le 12.05.2016
Ulm, 12-05-2016
Ulm, 2016.05.12.
Ulm, 12.05.2016
Ulmissa, 12.05.2016
Ulm, 12.05.2016
Ulm, 12.05.2016
Ulm, 12.05.2016
Ulm, dnia 12.05.2016
Ulm, 12.05.2016
Ulm, 12.05.2016
Ulm, dňa 12.05.2016
Ulm, 12.05.2016
Ulm, 12.05.2016
Ulm, dana 12.05.2016
Ulm, 12.05.2016
Улм, 12.05.2016
Ulm, 12.05.2016
Ulm, 12.05.2016
Ulme, 12.05.2016

Der Bevollmächtigte
Authorised representative
Le mandataire
De gevolmachtigde
Auktoriserad representant
Autoriseret repræsentant
Valtuutettu edustaja
Persona delegata
La persona autorizada
O representante
Pełnomocnik
Meghatalmazott
Zplnomocněnec
Splnomocnený
Ο εξουσιοδοτημένος
Pooblaščenec
Ovlaštena osoba
Conducerea tehnică
Упълномощен
Volitatud esindaja
Įgaliotasis atstovas
Pilnvarotā persona

Reinhard Pompe

Reinhard Pompe
Vice President

KEES VAN DOSPEK
ZEKERHEIDSTECHNIEK BELGIJK

Deutschland / Germany
GARDENA Manufacturing GmbH
Central Service
Hans-Lorenser-Straße 40
D-89079 Ulm
Produktfragen:
(+49) 731 490-123
Reparaturen:
(+49) 731 490-290
service@gardena.com

Albania
COBALT Sh.p.k.
Rr. Siri Kodra
1000 Tirana

Argentina
Husqvarna Argentina S.A.
Av.del Libertador 5954 –
Piso 11 – Torre B
(C1428ARP) Buenos Aires
Phone: (+54) 11 5194 5000
info.gardena@ar.husqvarna.com

Armenia
Garden Land Ltd.
61 Tigran Mets
0005 Yerevan

Australia
Husqvarna Australia Pty. Ltd.
Locked Bag 5
Central Coast BC
NSW 2252
Phone: (+ 61) (0) 2 4352 7400
customer.service@
husqvarna.com.au

Austria / Österreich
Husqvarna Austria GmbH
Industriezeile 36
4010 Linz
Tel. : (+43) 732 77 01 01-485
service.gardena@
husqvarnagroup.com

Azerbaijan
Firm Progress
a. Aliyev Str. 26A
1052 Baku

Belgium
Husqvarna België nv/sa
Gardena Division
Rue Egide Van Ophem 111
1180 Uccle / Ukkel
Tel.: (+32) 2 720 92 12
Mail: info@gardena.be

Bosnia / Herzegovina
SILK TRADE d.o.o.
Industrijska zona Bukva bb
74260 Tešanj

Brazil
Husqvarna do Brasil Ltda
Av. Francisco Matarazzo,
1400 – 19º andar
São Paulo – SP
CEP: 05001-903
Tel: 0800-112252
marketing.br.husqvarna@
husqvarna.com.br

Bulgaria
AGROLAND България АД
бул. 8 Декември, № 13
Офис 5
1700 Студентски град
София
Тел.: (+359) 24 66 6910
info@agroland.eu

Canada / USA
GARDENA Canada Ltd.
100 Summerlea Road
Brampton, Ontario L6T 4X3
Phone: (+1) 905 792 93 30
info@gardenacanada.com

Chile
Maquinarias Agroforestales
Ltda. (Maga Ltda.)
Santiago, Chile
Avda. Chesterton
8355 comuna Las Condes
Phone: (+56) 2 202 4417
Dalton@maga.cl
Zipcode: 7560330

China
Husqvarna (Shanghai)
Management Co., Ltd.
富世华（上海）管理有限公司
3F, Benq Square B,
No207, Song Hong Rd.,
Chang Ning District,
Shanghai, PRC. 200335
上海市长宁区淞虹路207号明
基广场B座3楼, 邮编: 200335

Colombia
Husqvarna Colombia S.A.
Calle 18 No. 68 D-31, zona
Industrial de Montevideo
Bogotá, Cundinamarca
Tel. 571 2922700 ext. 105
jairo.salazar@husqvarna.com.co

Costa Rica
Compania Exim
Euroiberoamericana S.A.
Los Colegios, Moravia,
200 metros al Sur del Colegio
Saint Francis – San José
Phone: (+506) 297 68 83
exim_euro@racsa.co.cr

Croatia
SILK ADRIA d.o.o.
Josipa Lončara 3
10090 Zagreb
Phone: (+385) 1 3794 580
silk.adria@zg.t-com.hr

Cyprus
Med Marketing
17 Digeni Akrita Ave
P.O. Box 27017
1641 Nicosia

Czech Republic
Husqvarna Česko s.r.o.
Türkova 2319/5b
149 00 Praha 4 – Chodov
Bezplatná infolinka :
800 100 425
servis@cz.husqvarna.com

Denmark
GARDENA DANMARK
Lejrvej 19, st.
3500 Værløse
Tlf.: (+45) 70 26 47 70
husqvarna@husqvarna.dk
www.gardena.com / dk

Dominican Republic
BOSQUESA, S.R.L
Carretera Santiago Licey
Km. 5 ½
Esquina Copal II.
Santiago
Dominican Republic
Phone: (+809) 736-0333
joserbosquesa@claro.net.do

Ecuador
Husqvarna Ecuador S.A.
Arupos E1-181 y 10 de
Agosto Quito, Pichincha
Tel. (+593) 22800739
francisco.jacome@
husqvarna.com.ec

Estonia
Husqvarna Eesti OÜ
Gardena Division
Valdeku 132
Tallinn
11216, Estonia
info@gardena.ee

Finland
Oy Husqvarna Ab
Gardena Division
Lautatarhankatu 8 B / PL 3
00581 HELSINKI
info@gardena.fi

France
Husqvarna France
9/11 Allée des pierres mayettes
92635 Gennevilliers Cedex
France
http : //www.gardena.com/ fr
N° AZUR: 0 810 00 78 23
(Prix d'un appel local)

Georgia
ALD Group
Beliashvili 8
1159 Tleilisi

Great Britain
Husqvarna UK Ltd
Preston Road
Aycliffe Industrial Park
Newton Aycliffe
County Durham
DL5 6UP
info.gardena@husqvarna.co.uk

Greece
Π.ΠΑΠΑΔΟΠΟΥΛΟΣ ΑΕΒΕ
Λεωφ. Αθηνών 92
Αθήνα
Τ.Κ.104 42
Ελλάδα
Τηλ. (+30) 210 5193 100
info@papadopoulos.com.gr

Hungary
Husqvarna Magyarország Kft.
Ezred u. 1 - 3
1044 Budapest
Telefon: (+36) 1 251-4161
vevoszolgalat.husqvarna@
husqvarna.hu

Iceland
Ó. Johnson & Kaaber
Tunguhalsi 1
110 Reykjavik
ooj@ojk.is

Ireland
Husqvarna UK Ltd
Preston Road
Aycliffe Industrial Park
Newton Aycliffe
County Durham
DL5 6UP
info.gardena@husqvarna.co.uk

Italy
Husqvarna Italia S.p.A.
Via Santa Vecchia 15
23868 VALMADRERA (LC)
Phone: (+39) 0341.203.111
assistenza.italia@it.husqvarna.com

KEESSENBROEK ★ TUINGEREEDSCHAPPEN ★ STRATEN

Japan
KAKUICHI Co. Ltd.
Sumitomo Realty &
Development Kojimachi
BLDG., 8F
5 -1 Nibanncyo
Chiyoda-ku
Tokyo 102-0084
Phone: (+81) 33 264 4721
m_ishihara@kaku-ichi.co.jp

Kazakhstan
LAMED Ltd.
155/1, Tazhibayevoi Str.
050060 Almaty
IP Schmidt
Abayavenue 3B
110 005 Kostanay

Korea
Kyung Jin Trading CO.,LTD.
107-4, SunDuk Bld.,
YangJae-dong,
Seocho-gu,
Seoul, (zipcode: 137-891)
Phone: (+82) (0)2 574-6300

Kyrgyzstan
Alye Maki
av. Moladaya Guardir J 3
720014
Bishkek

Latvia
Husqvarna Latvija SIA
Gardena Division
Ulbrokas 19A
LV-1021 Riga
info@gardena.lv

Lithuania
UAB Husqvarna Lietuva
Gardena Division
Ateities pl. 77C
LT-52104 Kaunas
info@gardena.lt

Luxembourg
Magasins Jules Neuberg
39, rue Jacques Stas
Luxembourg-Gasperich 2549
Case Postale No. 12
Luxembourg 2010
Phone: (+352) 40 14 01
api@neuberg.lu

Mexico
AFOSA
Av. Lopez Mateos Sur # 5019
Col. La Calma 45070
Zapopan, Jalisco, Mexico
Phone: (+52) 33 3818-3434
icornejo@afosa.com.mx

Moldova
Convel S.R.L.
290A Muncesti Str.
2002 Chisinau

Netherlands
Husqvarna Nederland B.V.
GARDENA Division
Postbus 50131
1305 AC ALMERE
Phone: (+31) 36 521 00 10
info@gardena.nl

Neth. Antilles
Jonka Enterprises N.V.
Sta. Rosa Weg 196
P.O. Box 8200
Curaçao
Phone: (+599) 9 767 66 55
pgm@jonka.com

New Zealand
Husqvarna New Zealand Ltd.
PO Box 76-437
Manukau City 2241
Phone: (+64) (0) 9 9202410
support.nz@husqvarna.co.nz

Norway
Husqvarna Norge AS
Gardena Division
Trøskenveien 36
1708 Sarpsborg
Tel: 69 10 47 00
www.gardena.no

Peru
Husqvarna Perú S.A.
Jr. Ramón Cárcamo 710
Lima 1
Tel: (+51) 1 3320400 ext. 416
juan.remuzgo@husqvarna.com

Poland
Husqvarna
Poland Spółka z o.o.
ul. Wysockiego 15 b
03-371 Warszawa
Phone: (+48) 22 330 96 00
gardena@husqvarna.com.pl

Portugal
Husqvarna Portugal, SA
Lagoa - Albarraque
2635 - 595 Rio de Mouro
Tel.: (+351) 21 922 85 30
Fax : (+351) 21 922 85 36
info@gardena.pt

Romania
Madex International Srl
Soseaua Odaii 117 - 123,
RO 013603 Bucureşti, S1
Phone: (+40) 21 352.76.03
madex@ines.ro

Russia / Россия
ООО „Husqvarna"
141400, Московская обл.,
г. Химки,
улица Ленинградская,
владение 39, стр.6
Бизнес Центр
„Химки Бизнес Парк",
помещение ОВ02_04
http://www.gardena.ru

Serbia
Domel d.o.o.
Autoput za Novi Sad bb
11273 Belgrade
Phone: (+381) 1 8 4 8 8 8 1 2
miroslav.jejina@domel.rs

Singapore
Hy-Ray PRIVATE LIMITED
40 Jalan Pemimpin
#02-08 Tat Ann Building
Singapore 577185
Phone: (+65) 6253 2277
shiying@hyray.com.sg

Slovak Republic
Husqvarna Česko s.r.o.
Türkova 2319/5b
149 00 Praha 4 – Chodov
Bezplatná infolinka:
800 154 044
servis@sk.husqvarna.com

Slovenia
Husqvarna Austria GmbH
Industriezeile 36
4010 Linz
Tel.: (+43) 732 77 01 01-485
service.gardena@
husqvarnagroup.com

South Africa
Husqvarna
South Africa (Pty) Ltd
Postnet Suite 250
Private Bag X6,
Cascades, 3202
South Africa
Phone: (+27) 33 846 9700
info@gardena.co.za

Spain
Husqvarna España S.A.
Calle de Rivas nº 10
28052 Madrid
Phone: (+34) 91 708 05 00
atenciencliente@gardena.es

Suriname
Agrofix n.v.
Verlengde Hogestraat #22
Phone: (+597) 472426
agrofix@sr.net
Pobox : 2006
Paramaribo
Suriname – South America

Sweden
Husqvarna AB
Gardena Division
S-561 82 Huskvarna
info@gardena.se

Switzerland / Schweiz
Husqvarna Schweiz AG
Consumer Products
Industriestrasse 10
5506 Mägenwil
Phone: (+ 41) (0) 62 887 37 90
info@gardena.ch

Turkey
Dost Bahçe Dış Ticaret
Mümessillik A.Ş
Yunus Mah. Adil Sok. No: 3
Ic Kapi No: 1 Kartal
34873 Istanbul
Phone: (+90) 216 38 93 939
info@dostbahce.com.tr

Ukraine / Україна
ТОВ «Хусварна Україна»
вул. Васильківська, 34,
офіс 204-г
03022, Київ
Тел. (+38) 044 498 39 02
info@gardena.ua

Uruguay
FELI SA
Entre Rios 1083 CP 11800
Montevideo – Uruguay
Tel : (+598) 22 03 18 44
info@felisa.com.uy

Venezuela
Corporación Casa y Jardín C.A.
Av. Caroní, Edif. Trezmen, PB.
Colinas de Bello Monte.
1050 Caracas.
Tlf : (+58) 212 992 33 22
info@casayjardin.net.ve

8838-20.960.07/0817
© GARDENA Manufacturing GmbH
D-89070 Ulm
http://www.gardena.com