Husqvarna

SPARE PARTS LIST

ROBOTIC LAWN MOWERS

AUTOMOWER 420, 2020-

KEES VAN DER SPEK

A AUTOMOWER 420 COVER

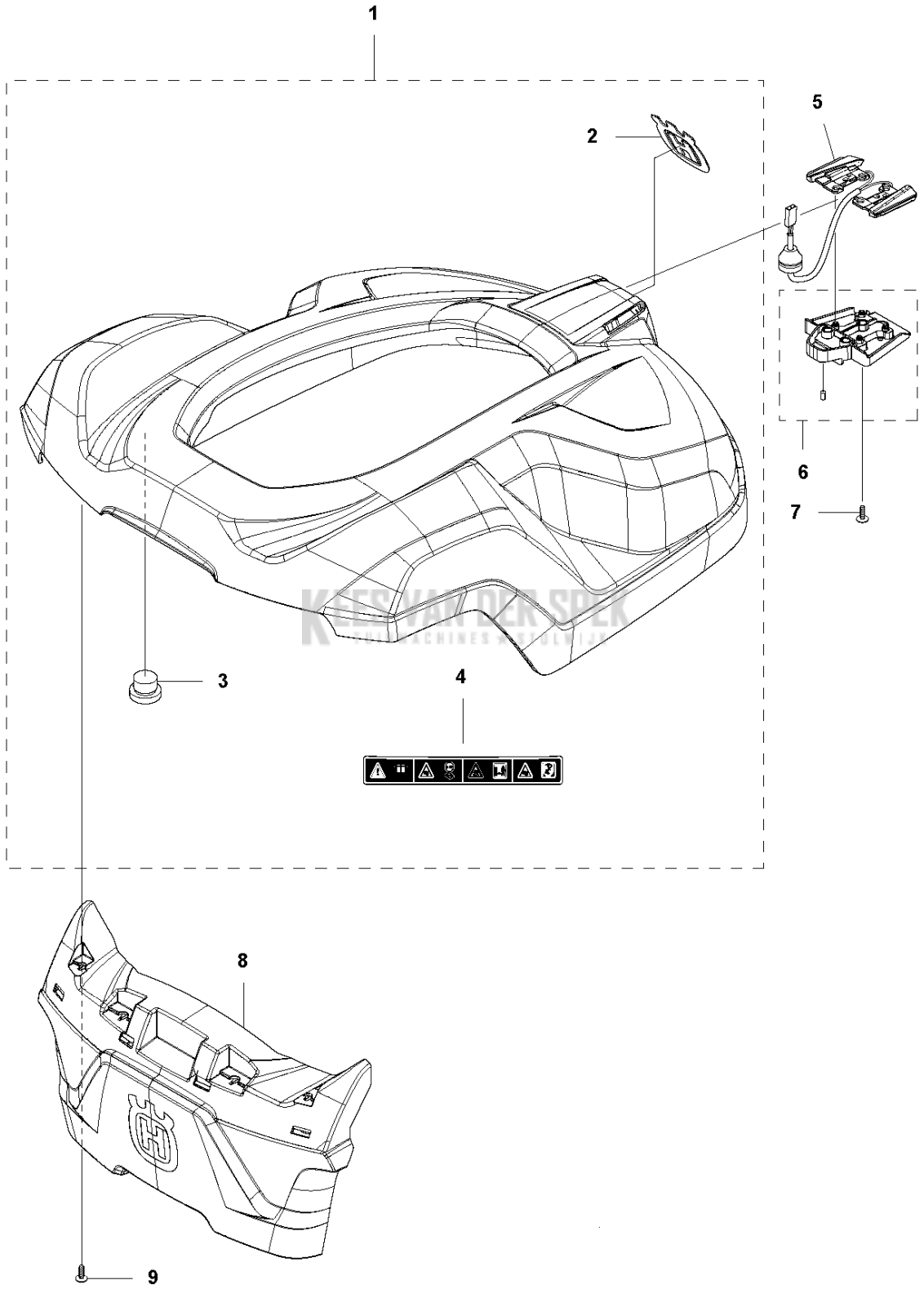

KESSVAN DER SPEK

Referentie	Onderdeel nr	Omschrijving	Opmerking	Aant KIT al
1	581 62 04-05	BODY KIT	Body KIT	1
2	587 42 35-01	STICKER	Decal	1
3	580 52 68-01	KAP	Cap	4
4	586 35 97-01	PLAATJE	Label	1
5	585 53 92-04	KABEL COMPL.	Charging Plate Wiring	1
6	501 06 56-02	HOUDER COMPL.	Holder ASSY	1
7	575 54 33-14	SCREW	Screw	1
8	579 51 98-02	BUMPER	Bumper	1
9	574 45 01-01	SCHROEF ITXPANT	Screw	4

KEES VAN DER SPEK
TUINMACHINES ★ STOLWIJK

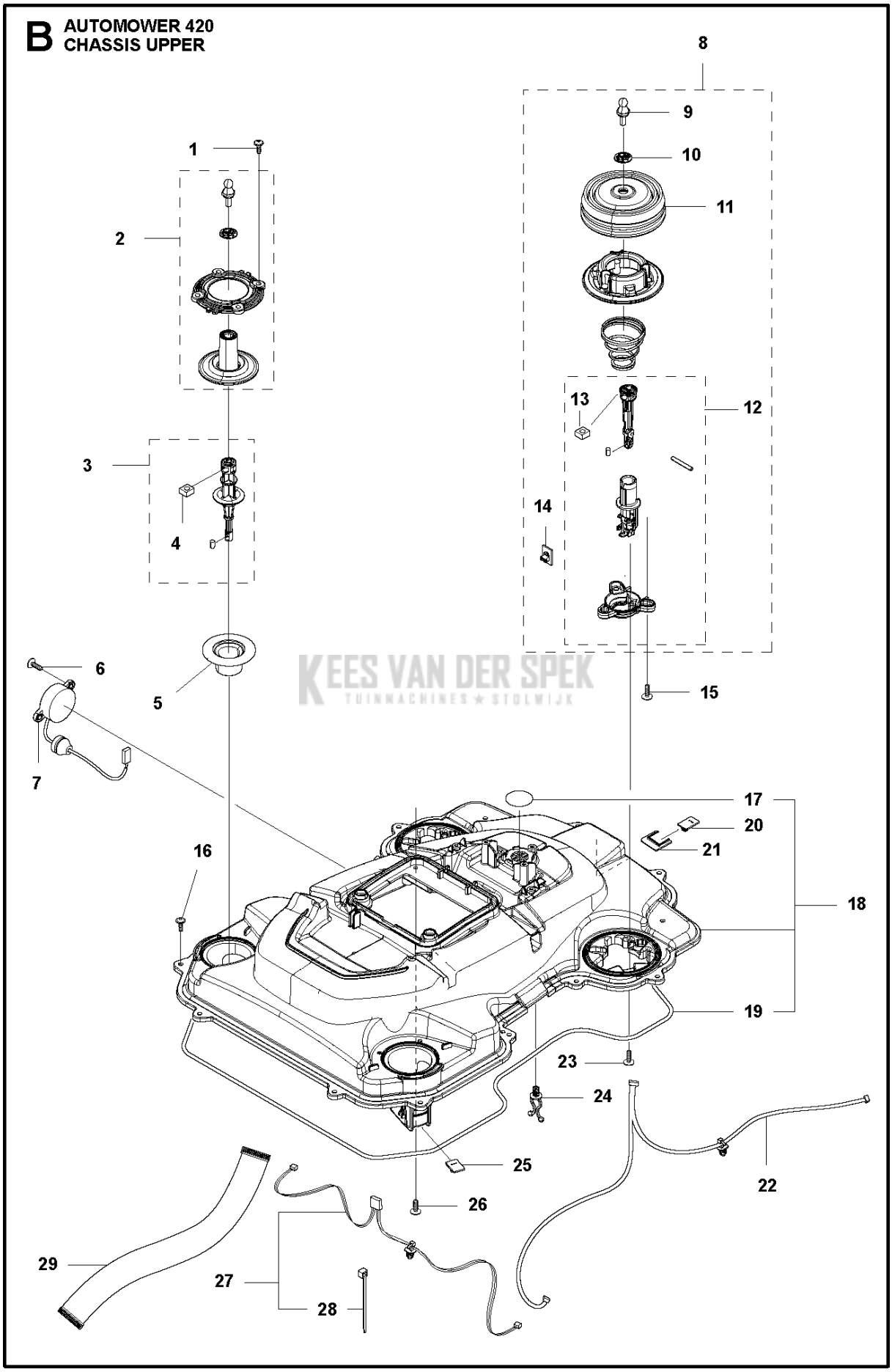

KEES VAN DER SPEK
TUINMACHINES ★ STOLWIJK

Referentie	Onderdeel nr	Omschrijving	Opmerking	Aant KIT al
1	574 45 01-01	SCHROEF ITXPANT	Screw	8
2	501 06 13-01	JOYSTICK KIT	Joystick KIT Rear	2
3	501 12 26-02	JOYSTICK KIT	Column KIT	2
4	503 22 66-01	MOER 4-KANT	Square Nut	2
5	535 14 32-01	BEGRENZINGS LIMITER	Deflection Limiter	2
6	575 54 33-14	SCREW	Screw	2
7	579 70 63-02	BUZZER	Buzzer	1
8	581 62 09-03	JOYSTICK KIT	Joystick KIT	2
9	580 52 67-01	TAPEIND	Stud	2
10	579 52 57-01	RING	Washer	2
11	579 47 46-01	BALG	Bellows	2
12	587 44 88-02	JOYSTICK KIT	Rod KIT	2
13	503 22 66-01	MOER 4-KANT	Square Nut	2
14	592 85 23-01	PRINTPLAAT COMPL.	Printed Circuit ASSY	2
15	575 54 33-14	SCREW	Screw	6
16	574 45 01-01	SCHROEF ITXPANT	Screw	14
17	577 75 37-01	LUCHTFILTER	Air Filter KIT 10 pcs	1
18	581 62 08-02	CHASSIS KIT	Chassis KIT	1
19	574 87 47-05	AFDICHTINGSSTRIP	Sealing Strip (1 pcs, ¯5 mm)	1
20	592 85 24-01	PRINTPLAAT COMPL.	Printed Circuit ASSY	1
21	587 83 49-01	KLEM	Clip	1
22	581 66 09-01	LOOM KIT	Loom KIT	1
23	574 45 01-01	SCHROEF ITXPANT	Screw	6
24	580 68 29-01	HOLDER	Holder	2
25	592 85 24-01	PRINTPLAAT COMPL.	Printed Circuit ASSY	1
26	575 54 33-14	SCREW	Screw	4
27	581 62 11-01	LOOM KIT	Loom KIT	1
28	900 23 87-08	BINDBAND	Tie Wrap	2
29	579 70 62-01	KABEL COMPL.	Loom	1

KEES VAN DER SPEK
TUINMACHINES ★ STOLWIJK

C AUTOMOWER 420 CENTER CONSOL

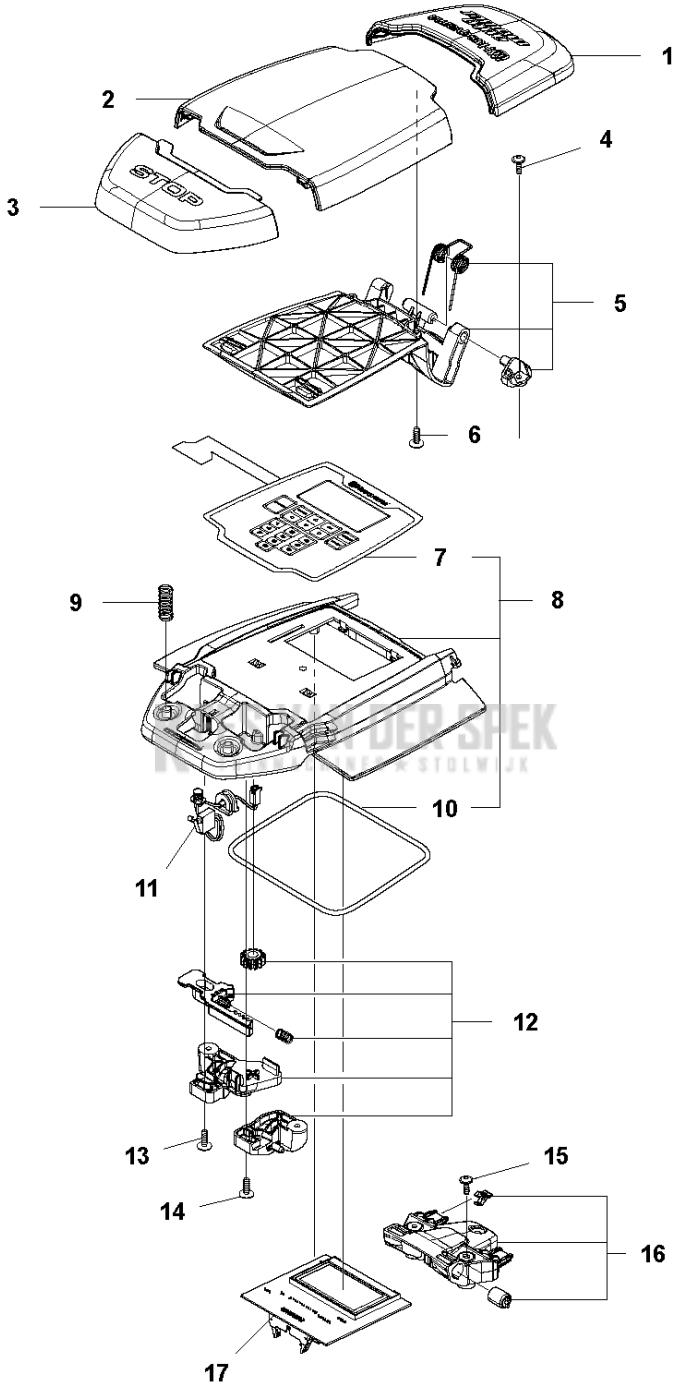

Referentie	Onderdeel nr	Omschrijving	Opmerking	Aant KIT al
1	588 79 75-01	DEKSEL	Cover	1
2	579 45 85-01	LUIK	Hatch	1
3	579 45 81-01	KNOOP	Button	1
4	575 54 33-14	SCREW	Screw	2
5	501 06 58-01	HINGE KIT	Hinge KIT	1
6	575 54 33-14	SCREW	Screw	2
7	579 62 79-01	TOETSENBORD	Keyboard	1
8	581 62 06-01	DEKSELSET	Cover KIT	1
9	535 13 01-01	VEER	Spring	2
10	574 87 47-06	AFDICHTINGSSTRIP	Sealing Strip (1 pcs, ¯5 mm)	1
11	574 48 03-02	SCHAKELAAR	Switch	1
12	501 06 60-01	LOCK KIT	Locking Plate KIT	1
13	575 54 33-14	SCREW	Screw	1
14	575 54 33-14	SCREW	Screw	1
15	575 54 33-14	SCREW	Screw	3
16	581 62 07-01	SUPPORT KIT	Support KIT	1
17	592 91 04-01	PRINTPLAAT COMPL.	Printed Circuit ASSY	1

KEES VAN DER SPEK
TUINMACHINES ★ STOLWIJK

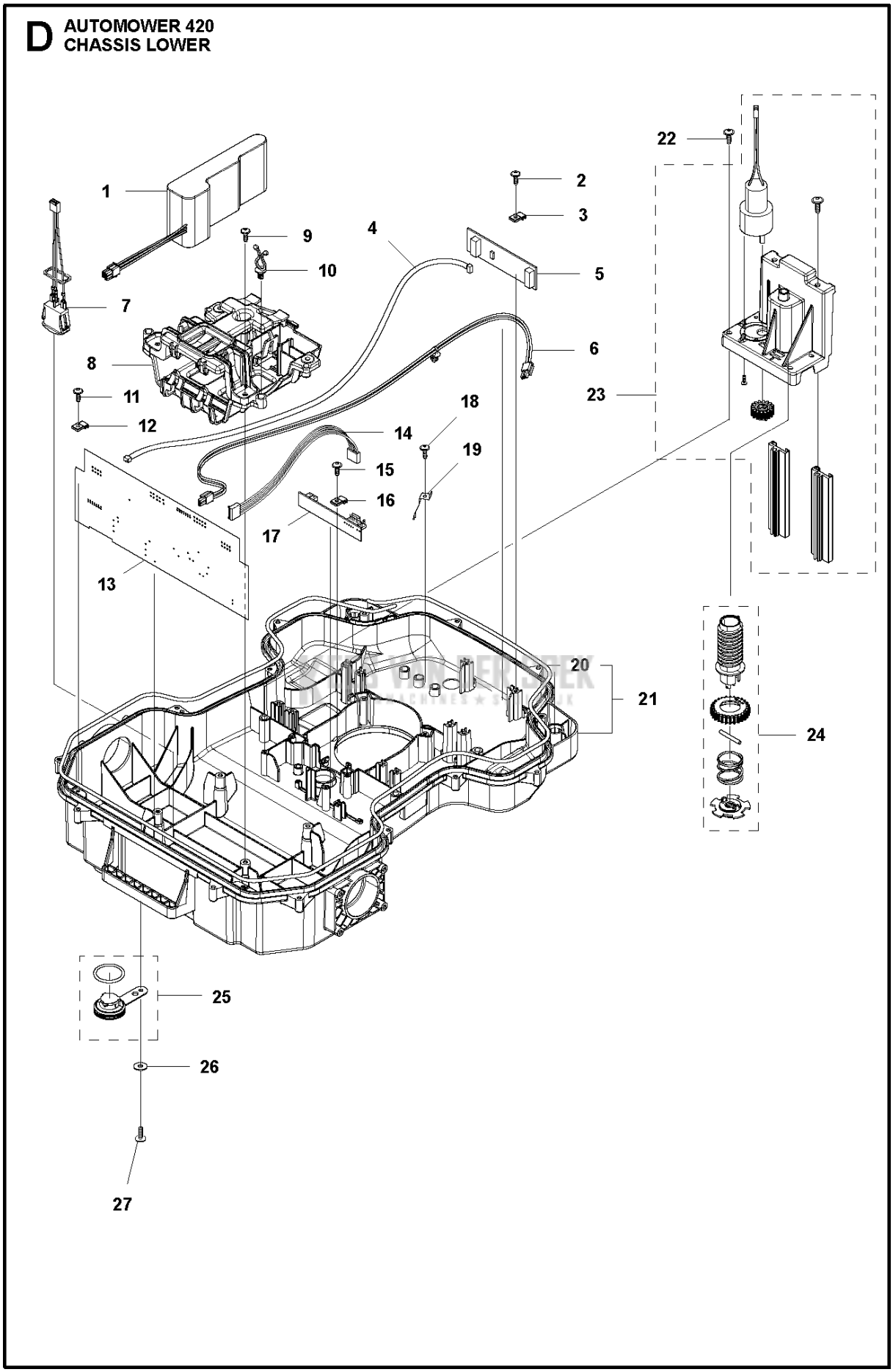
D
AUTOMOWER 420
CHASSIS LOWER
1
2
3
4
5
6
7
8
9
10
11
12
13
14
15
16
17
18
19
20
21
22
23
24
25
26
27

Referentie	Onderdeel nr	Omschrijving	Opmerking	Aant KIT al
1	589 58 52-01	ACCU	Battery	1
2	575 54 33-14	SCREW	Screw	2
3	579 52 94-01	KLEM	Clamp	2
4	579 70 82-01	BEKABELING COMPL.	Loom	1
5	588 90 30-01	PRINTPLAAT COMPL.	Printed Circuit ASSY	1
6	580 37 07-02	HANDVAT	Loom	1
7	579 70 87-01	BEKABELING COMPL.	Switch, On Off	1
8	580 60 96-02	HOUDER	Holder	1
9	574 45 01-01	SCHROEF ITXPANT	Screw	5
10	580 68 29-01	HOLDER	Holder	7
11	575 54 33-14	SCREW	Screw	2
12	579 52 94-01	KLEM	Clamp	2
13	592 85 26-01	PRINTPLAAT COMPL.	Printed Circuit ASSY	1
14	579 70 80-01	BEKABELING COMPL.	Loom	1
15	575 54 33-14	SCREW	Screw	1
16	579 52 94-01	KLEM	Clamp	1
17	579 72 85-02	PRINTPLAAT COMPL.	Printed Circuit ASSY	1
18	575 54 33-14	SCREW	Screw	2
19	581 55 61-01	VEER	Spring	2
20	574 87 47-05	AFDICHTINGSSTRIP	Sealing Strip (1 pcs, ¯5 mm)	1
21	581 62 17-01	CHASSIS KIT	Chassis KIT	1
22	575 54 33-14	SCREW	Screw	4
23	501 06 83-01	MOTOR COMPL.	Motor ASSY	1
24	581 62 16-01	SCREW KIT	Screw KIT	1
25	581 62 12-02	PLUG KIT	Plug KIT	1
26	734 11 37-41	RING	Washer	1
27	574 45 01-01	SCHROEF ITXPANT	Screw	1

KEES VAN DER SPEK
TUINMACHINES ★ STOLWIJK

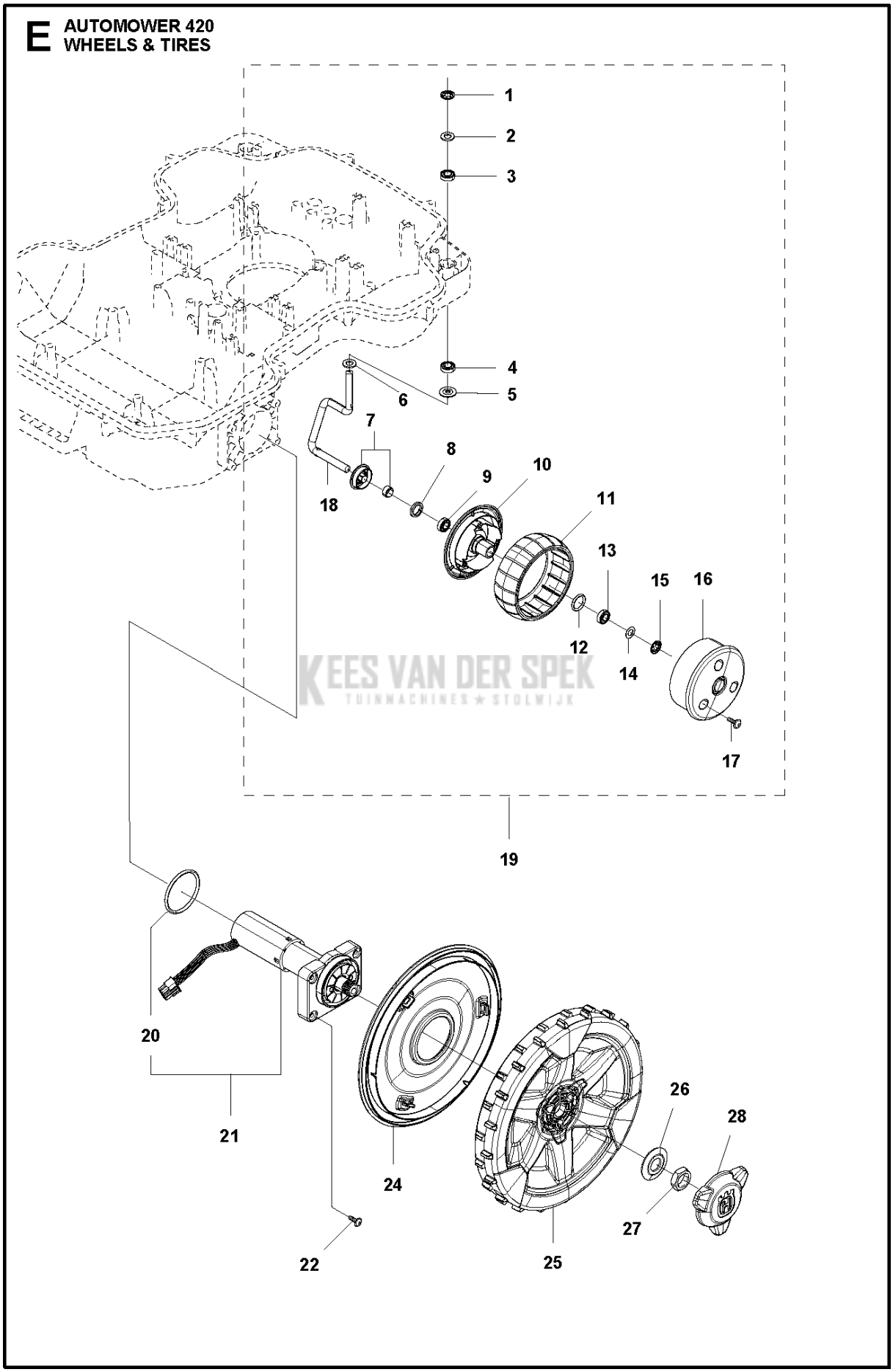
E
AUTOMOWER 420
WHEELS & TIRES
1
2
3
4
5
6
7
8
9
10
11
12
13
14
15
16
17
18
19
20
21
22
24
25
26
27
28
KEES VAN DER SPEK
TUINMACHINES ★ STOLWIJK

Referentie	Onderdeel nr	Omschrijving	Opmerking	Aant KIT al
1	576 01 93-02	BORGRING	Lock Washer	2
2	580 76 46-01	RING	Washer	2
3	580 60 51-01	KOGELLAGER	Ball Bearing	2
3	597 79 56-01	KOGELLAGER	Tube 50 pcs	1
4	580 60 51-01	KOGELLAGER	Ball Bearing	2
4	597 79 56-01	KOGELLAGER	Tube 50 pcs	1
5	535 08 78-03	RING	Washer	2
6	580 76 46-01	RING	Washer	2
7	581 62 15-01	SHIELD KIT	Sheild KIT	2
8	580 48 71-01	AFDICHTING	Sealing	2
9	580 60 51-01	KOGELLAGER	Ball Bearing	2
9	597 79 56-01	KOGELLAGER	Tube 50 pcs	1
10	579 45 71-01	WIEL	Wheel Inside	2
11	574 44 98-01	WIEL	Tire	2
12	580 44 51-01	O-RING	O-ring	2
13	580 60 51-01	KOGELLAGER	Ball Bearing	2
13	597 79 56-01	KOGELLAGER	Tube 50 pcs	1
14	580 76 46-01	RING	Washer	2
15	576 01 93-02	BORGRING	Lock Washer	2
16	579 45 72-01	WIEL	Wheel Outside	2
17	575 54 33-14	SCREW	Screw	6
18	580 33 61-01	SPINDEL	Spindle	2
19	581 62 14-01	WHEEL KIT	Front Wheel KIT	2
20	580 44 39-02	O-RING	O-ring	2
21	581 62 13-05	MOTOR KIT	Wheel Motor ASSY	2
22	574 45 01-01	SCHROEF ITXPANT	Screw	8
24	582 27 60-01	DEKSEL	Cover	2
25	582 28 02-01	WIEL COMPL.	Rear Wheel	2
26	586 21 06-01	RING	Spring Washer	2
27	731 43 24-01	DUNNE ZESKANTIGE MOER	Thin Nut	2
28	579 50 55-02	NAAFDOP	Hub Cap	2

KEES VAN DER SPEK
TUINMACHINES ★ STOLWIJK

F AUTOMOWER 420
BLADE MOTOR & CUTTING EQUIPMENT

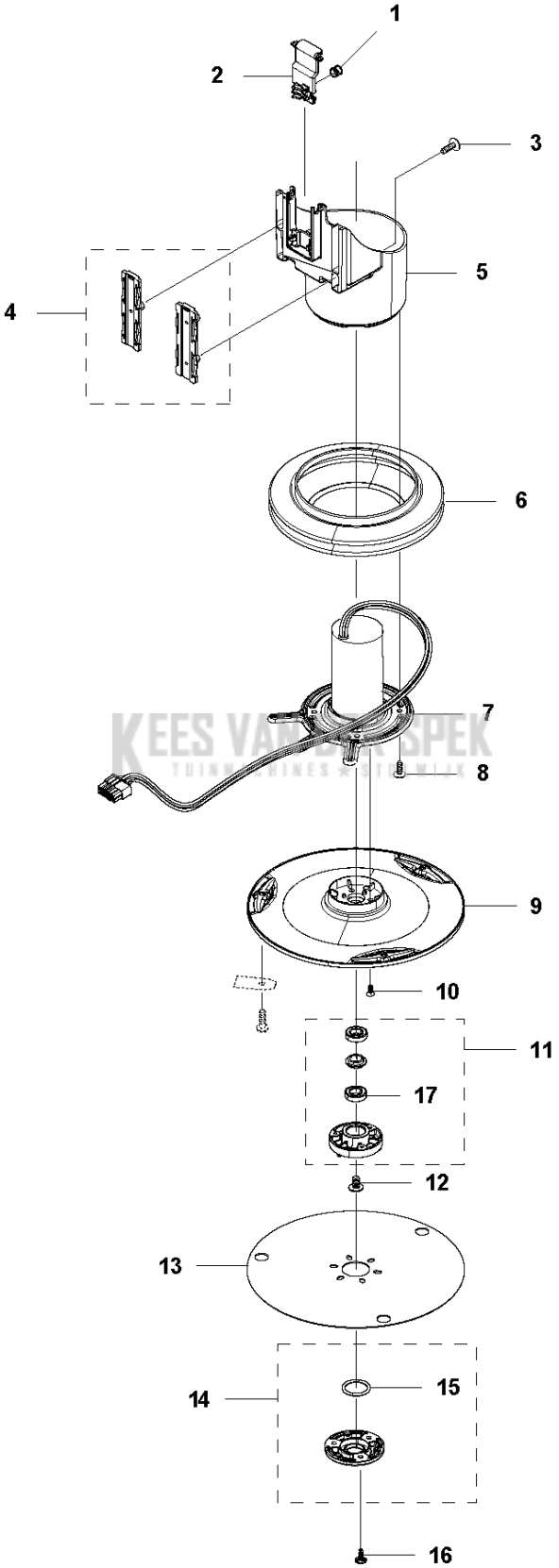

Referentie	Onderdeel nr	Omschrijving	Opmerking	Aantal	KIT
1	580 62 44-01	VEER	Spring	1	
2	579 56 46-01	SCHAKEL	Link	1	
3	575 54 33-14	SCREW	Screw	3	
4	581 62 18-01	LAGERSET	Bearing KIT	1	
5	579 56 45-01	HUIS	Housing	1	
6	579 66 64-03	BALG	Bellows	1	
7	587 38 14-01	MOTOR COMPL.	Cutting Motor ASSY	1	
8	575 54 33-14	SCREW	Screw	4	
9	587 37 81-01	ZAAGSCHIJF	Cutting Disc	1	
10	535 13 05-02	SCREW	Screw	3	
11	588 42 17-02	LAGERHUIS COMPL	Bearing Housing ASSY	1	
12	535 07 60-01	SCREW	Screw	1	
13	587 37 80-01	GLIJ PLAAT	Skid Plate	1	
14	587 44 96-01	DEKSELSET	Bearing Cover ASSY	1	
15	585 29 75-01	O-RING	O-Ring	1	
16	575 54 33-14	SCREW	Screw	3	
17	535 07 57-03	KOGELLAGER		1	11
17	593 08 08-01	KOGELLAGER	Tube 50 pcs	1	

KEES VAN DER SPEK
TUINMACHINES ★ STOLWIJK

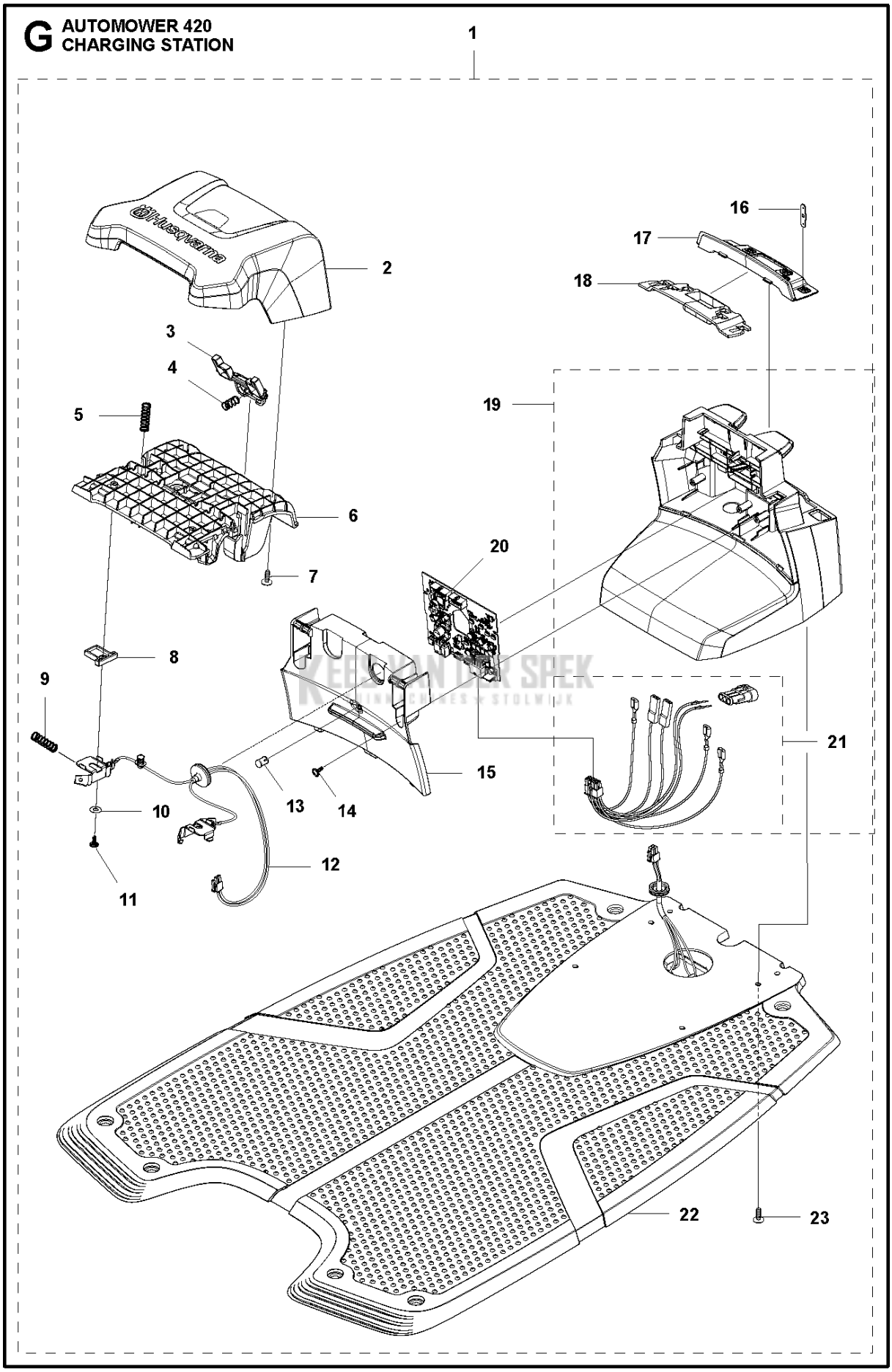
G AUTOMOWER 420
CHARGING STATION
husqvarna
1
2
3
4
5
6
7
8
9
10
11
12
13
14
15
16
17
18
19
20
21
22
23

Referentie	Onderdeel nr	Omschrijving	Opmerking	Aant KIT al
1	580 76 55-07	LAADSTATION	Charging Station	1
2	579 44 82-03	KAP	Cap	1
3	579 46 24-02	KNOOP	Button	1
4	574 48 70-01	VEER	Spring	1
5	580 51 14-01	VEER	Spring	2
6	579 45 80-04	FRAME	Frame	1
7	575 54 33-14	SCREW	Screw	4
8	579 46 05-01	AFSTANDRING	Distance	2
9	580 51 14-01	VEER	Spring	2
10	734 11 37-41	RING	Washer	2
11	575 54 33-14	SCREW	Screw	2
12	585 53 95-02	KABEL COMPL.	Loom Charging Contact	1
13	590 21 72-01	LENS	Lens	1
14	575 54 33-14	SCREW	Screw	2
15	579 45 97-04	DEKSEL	Lid	1
16	580 50 41-01	KLEM	Terminal	3
17	579 45 98-01	PAN	Panel	1
18	579 45 99-01	HOLDER	Holder	1
19	588 18 88-01	HUIS COMPL.	Housing KIT	1
20	592 89 45-01	PRINTPLAAT COMPL.	PCBA Charging Station	1
21	588 47 89-01	KABELSET	Wiring CS	1
22	590 09 40-01	BASE ASSY	Charging Plate	1
23	575 54 33-14	SCREW	Screw	4

KEES VAN DER SPEK
TUINMACHINES ★ STOLWIJK

H AUTOMOWER 420 INSTALLATION ACCESSORIES

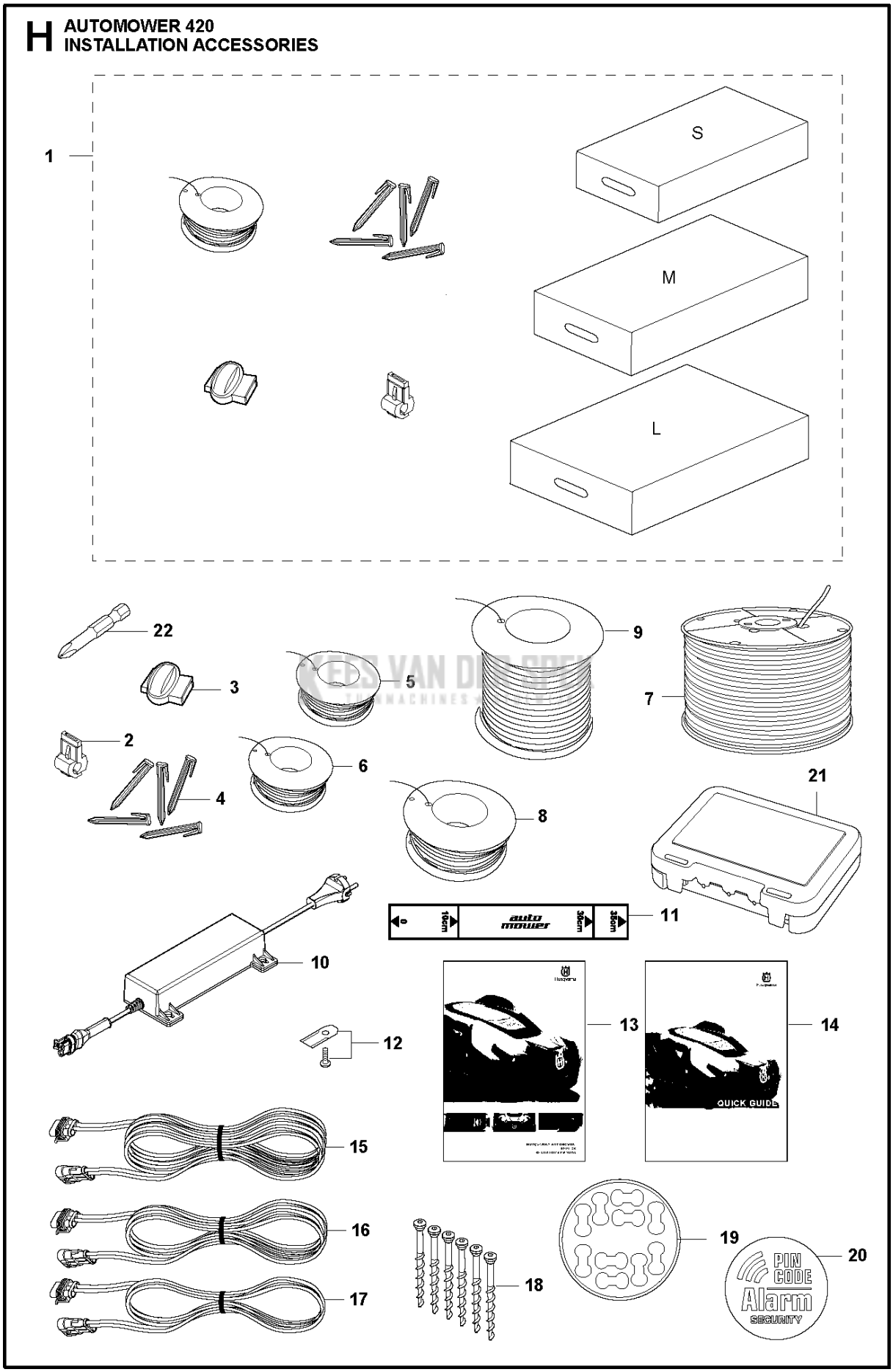

Referentie	Onderdeel nr	Omschrijving	Opmerking	Aant KIT al
1	967 62 36-01	INSTALLATION KIT	Installation KIT S: Wire (150 m), Staples (300 pcs), Connectors (3 pcs), Couplers (5 pcs)	1
1	967 62 36-02	INSTALLATION KIT	Installation KIT M: Wire (250 m), Staples (400 pcs), Connectors (3 pcs), Couplers (5 pcs)	1
1	967 62 36-03	INSTALLATION KIT	Installation KIT L: Wire (400 m), Staples (600 pcs), Connectors (5 pcs), Couplers (5 pcs)	1
2	535 12 90-01	VERBINDER	Loop Wire Connector	1
2	577 86 48-01	VERBINDER	Loop Wire Connectors, Blister Pack, 5pcs	1
2	535 12 90-02	VERBINDER	Loop Wire Connector, Blister Pack, 100 pcs	1
3	501 98 02-01	KOPPELSTUK	Coupler	1
3	577 86 47-01	KOPPELSTUK	Couplers, Blister Pack, 5 pcs	1
3	501 98 02-03	KOPPELSTUK	Couplers, 100 pcs	1
4	577 86 42-01	NIET	Staples, 85 mm, Blister Pack, 100 pcs	1
4	583 97 34-01	NIET	Staples, 85 mm, 100 pcs	1
5	580 66 20-02	KABEL	Wire (150 m)	1
5	577 86 43-02	KABEL	Wire Blister Pack, (50 m)	1
5	577 86 43-01	KABEL	Wire Blister Pack, (150 m)	1
6	580 66 20-01	KABEL	Wire (250 m)	1
7	593 29 77-01	KABEL	Wire Pro 300m	1
8	522 91 41-01	KABEL	Wire (500 m, ¯3.4 mm)	1
9	580 66 20-04	KABEL	Wire (800 m)	1
10	590 44 23-01	MOTOR UNIT	Transformer (EU)	1
10	590 44 23-02	MOTOR UNIT	Transformer (UK/IRL)	1
10	586 75 53-03	MOTOR UNIT	Transformer (CH)	1
10	586 75 53-04	MOTOR UNIT	Transformer (US/CA)	1
10	586 75 53-05	MOTOR UNIT	Transformer (AU/NZ)	1
11	544 17 75-01	MEETBAND	Measuring Tape	1
12	577 86 46-03	BLADE SET	Long Life Safety Blades, Blister Pack, 9 pcs	1
12	577 60 65-05	BLADE SET	Long Life Safety Blades, 45 pcs	1
12	577 60 66-04	BLADE SET	Long Life Safety Blades, 300 pcs	1
13	115875801	TBD	Operator's Manual, Swedish	1
13	115875806	TBD	Operator's Manual, Danish	1
13	115875811	TBD	Operator's Manual, Finnish	1
13	115875821	TBD	Operator's Manual, Norwegian	1
13	115875826	TBD	Operator's Manual, English	1
13	115875831	TBD	Operator's Manual, French	1
13	115875832	TBD	Operator's Manual, French (Canada)	1
13	115875836	TBD	Operator's Manual, Dutch	1
13	115875841	TBD	Operator's Manual, Italian	1
13	115875846	TBD	Operator's Manual, Spanish	1
13	115875851	TBD	Operator's Manual, German	1
13	115875856	TBD	Operator's Manual, Russian	1
13	115875858	TBD	Operator's Manual, Hungarian	1
13	115875859	TBD	Operator's Manual, Portuguese	1
13	115875861	TBD	Operator's Manual, Polish	1
13	115875862	TBD	Operator's Manual, Romanian	1

REES VAN DER SPEK TUINMACHINES ★ STOLWIJK

Referentie	Onderdeel nr	Omschrijving	Opmerking	Aant KIT al
13	115875863	TBD	Operator's Manual, Estonian	1
13	115875864	TBD	Operator's Manual, Latvian	1
13	115875865	TBD	Operator's Manual, Lithuanian	1
13	115875868	TBD	Operator's Manual, Slovakian	1
13	115875871	TBD	Operator's Manual, Greek	1
13	115875876	TBD	Operator's Manual, Turkish	1
13	115875881	TBD	Operator's Manual, Croatian	1
13	115875884	TBD	Operator's Manual, Slovenian	1
13	115875890	TBD	Operator's Manual, Czech	1
13	115875895	TBD	Operator's Manual, English: EPA, CARB	1
13	115875896	TBD	Operator's Manual, Spanish (US)	1
14	115 84 51-10	QUICK GUIDE	Quick Guide, Swedish, Danish, Norwegian, Finnish	1
14	115845120	TBD	Quick Guide, German, French, Dutch, Slovenian	1
14	115845130	TBD	Quick Guide, Spanish, Portuguese, Italian, English	1
14	115845138	TBD	Quick Guide, English, Spanish, French, Japanese (incl. US/CA)	1
14	115845139	TBD	Quick Guide, German, French, Italian, English	1
14	115845140	TBD	Quick Guide, Russian, Estonian, Latvian, Lithuanian	1
14	115845150	TBD	Quick Guide, Czech, Slovak, Polish, Hungarian	1
14	115845193	TBD	Quick Guide, Croatian, Turkish, Romanian, Greek	1
15	579 82 51-01	KABEL COMPL.	Low Voltage Cable 20 meter	1
16	579 82 51-02	KABEL COMPL.	Low Volt Cabel 10 meter	1
17	579 82 51-04	KABEL COMPL.	Low Voltage Cable (5 m)	1
17	579 82 51-03	KABEL COMPL.	Low Volt Cabel 3 meter	1
18	575 23 86-01	SCREW KIT	Screw KIT, 6 pcs	1
18	577 86 49-01	SCREW	Screw KIT, Blister Pack, 3 pcs	1
19	586 27 79-01	STICKER	Sticker Cable Markers, 10 pcs	1
20	579 57 12-01	PLAATJE	Label Alarm	1
21	590 85 50-01	DOOS	Cable Connector Protection	1
22	596 33 98-01	GEREEDSCHAP	Bit for Automower blades MOQ 5 pcs	1

KEES VAN DER SPEK TUINMACHINES ★ STOLWIJK

AUTOMOWER 420 ACCESSORIES

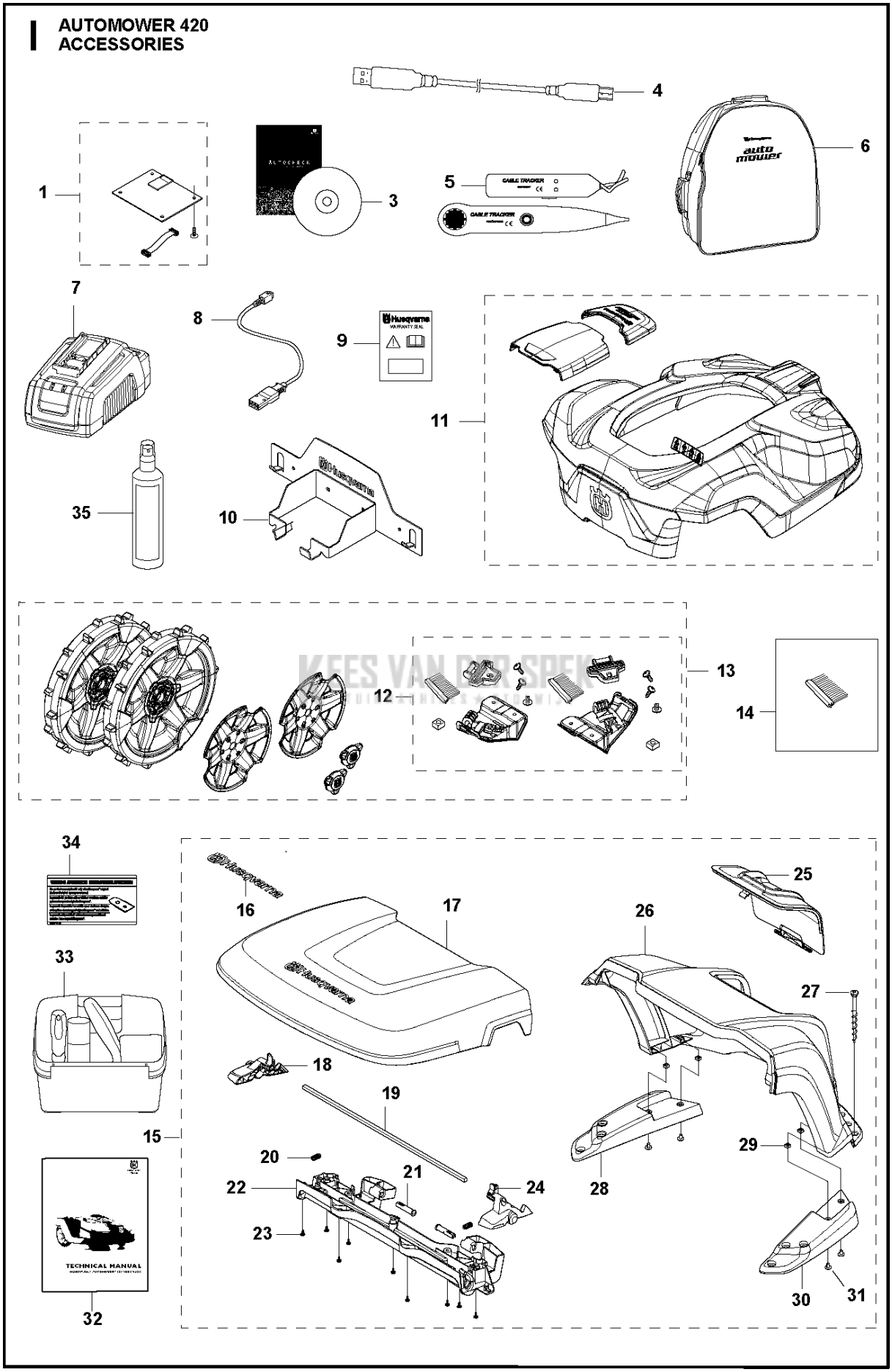

KEES VAN DER SPEK

Referentie	Onderdeel nr	Omschrijving	Opmerking	Aant KIT al
1	586 66 23-04	GPS MODULE	Automower Connect KIT - All markets except. JP	1
3	577 85 81-03	DVD	DVD Autocheck EXP	1
4	577 51 81-02	KABEL	Service Cable (USB)	1
5	577 60 68-01	TESTUITRUSTING	Interruption Detector	1
6	522 91 67-01	TAS	Bag	1
7	588 40 84-01	OPLADER	Quick Charger with Battery Test	1
8	588 20 26-01	KABEL COMPL.	Cable Quick Charger	1
9	580 68 95-02	PLAATJE	Warranty Seal 1pcs	1
10	585 01 97-02	WALL HANGER	Wall Hanger	1
11	580 96 56-02	BODY KIT	Body KIT White	1
12	581 90 31-02	BORSTELSET	Brush KIT incl. Brush, 6 pcs	
13	581 88 97-02	WHEEL KIT	Rear Wheel KIT incl. Brush KIT	1
14	581 98 20-02	BORSTELSET	Brush, 6 pcs	1
15	585 01 94-01	HUIS	House KIT	1
16	577 46 90-01	STICKER	Decal	1
17	586 88 58-01	KIT	Cover Lid	1
18	585 32 40-02	HENDEL	Handle Left	1
19	585 32 41-01	STANG	Steel Rod	1
20	580 51 14-01	VEER	Spring	2
21	585 34 15-01	SCHANIERPEN	Hinge Pin	2
22	585 34 16-01	BALK	Beam	1
23	575 54 33-14	SCREW	Screw	9
24	585 32 40-01	HENDEL	Handle Right	1
25	585 32 36-01	LUIK	Hatch	1
26	585 32 34-01	DEKSEL	Cover Base	1
27	575 23 86-01	SCREW KIT	Screw KIT, 6 pcs	1
28	585 32 38-02	STEUN	Support Base Left	1
29	503 22 66-01	MOER 4-KANT	Square Nut	4
30	585 32 38-01	STEUN	Support Base Right	1
31	535 12 93-03	SCHROEF IHPANM	Screw	4
32	115 81 90-01	WERKPLAATSHANDBOEK	Technical Handbook -420, 430X, 450X Swedish	1
32	115 81 90-06	WERKPLAATSHANDBOEK	Technical Handbook -420, 430X, 450X Danish	1
32	115 81 90-11	WERKPLAATSHANDBOEK	Technical Handbook -420, 430X, 450X Finnish	1
32	115 81 90-21	WERKPLAATSHANDBOEK	Technical Handbook -420, 430X, 450X Norwegian	1
32	115 81 90-26	WERKPLAATSHANDBOEK	Technical Handbook -420, 430X, 450X English	1
32	115 81 90-31	WERKPLAATSHANDBOEK	Technical Handbook -420, 430X, 450X French	1
32	115 81 90-36	WERKPLAATSHANDBOEK	Technical Handbook -420, 430X, 450X Dutch	1
32	115 81 90-41	WERKPLAATSHANDBOEK	Technical Handbook -420, 430X, 450X Italian	1
32	115 81 90-46	WERKPLAATSHANDBOEK	Technical Handbook -420, 430X, 450X Spanish	1
32	115 81 90-51	WERKPLAATSHANDBOEK	Technical Handbook -420, 430X, 450X German	1
32	115819056	TBD	Technical Handbook -420, 430X, 450X Russian	1
32	115819058	TBD	Technical Handbook -420, 430X, 450X Hungarian	1
32	115819059	TBD	Technical Handbook -420, 430X, 450X Portuguese	1
32	115819061	TBD	Technical Handbook -420, 430X, 450X Polish	1
32	115819062	TBD	Technical Handbook -420, 430X, 450X Romanian	1
32	115819063	TBD	Technical Handbook -420, 430X, 450X Estonian	1

KEES VAN DER SPEK TUINMACHINES ★ STOLWIJK

Referentie	Onderdeel nr	Omschrijving	Opmerking	Aant KIT al
32	115819064	TBD	Technical Handbook -420, 430X, 450X Latvian	1
32	115819065	TBD	Technical Handbook -420, 430X, 450X Lithuanian	1
32	115819068	TBD	Technical Handbook -420, 430X, 450X Slovakian	1
32	115819071	TBD	Technical Handbook -420, 430X, 450X Greek	1
32	115819076	TBD	Technical Handbook -420, 430X, 450X Turkish	1
32	115819079	TBD	Technical Handbook -420, 430X, 450X Japanese	1
32	115819081	TBD	Technical Handbook -420, 430X, 450X Croatian	1
32	115 81 90-84	WERKPLAATSHANDBOEK	Technical Handbook -420, 430X, 450X Slovenian	1
32	115819090	TBD	Technical Handbook -420, 430X, 450X Czech	1
32	115819096	TBD	Technical Handbook -420, 430X, 450X Spanish (USA)	1
33	590 85 51-01	KIT	Maintenance and cleaning kit	1
34	591 37 41-01	STICKER	Original Parts Sticker	1
34	591 37 41-02	STICKER	Original Parts Sticker	1
34	591 37 41-03	STICKER	Original Parts Sticker	1
35	593 96 79-01	SPRAY		1

KEES VAN DER SPEK
TUINMACHINES ★ STOLWIJK