LR 48 TKE COMFORT PLUS (K655LI) EURO 5 Lawnmower

Documenten

Complete illustrated parts list

Crankcase

Crankcase cover

Shaft + piston

Reed valve kit

Ignition system

Carburetor

Air filter

Control lever

Muffler

Tank

Start motor assy

KEES VAN DER SPEK
TUINMACHINES ★ STOLWIJK

Copyright EMAK S.P.A.

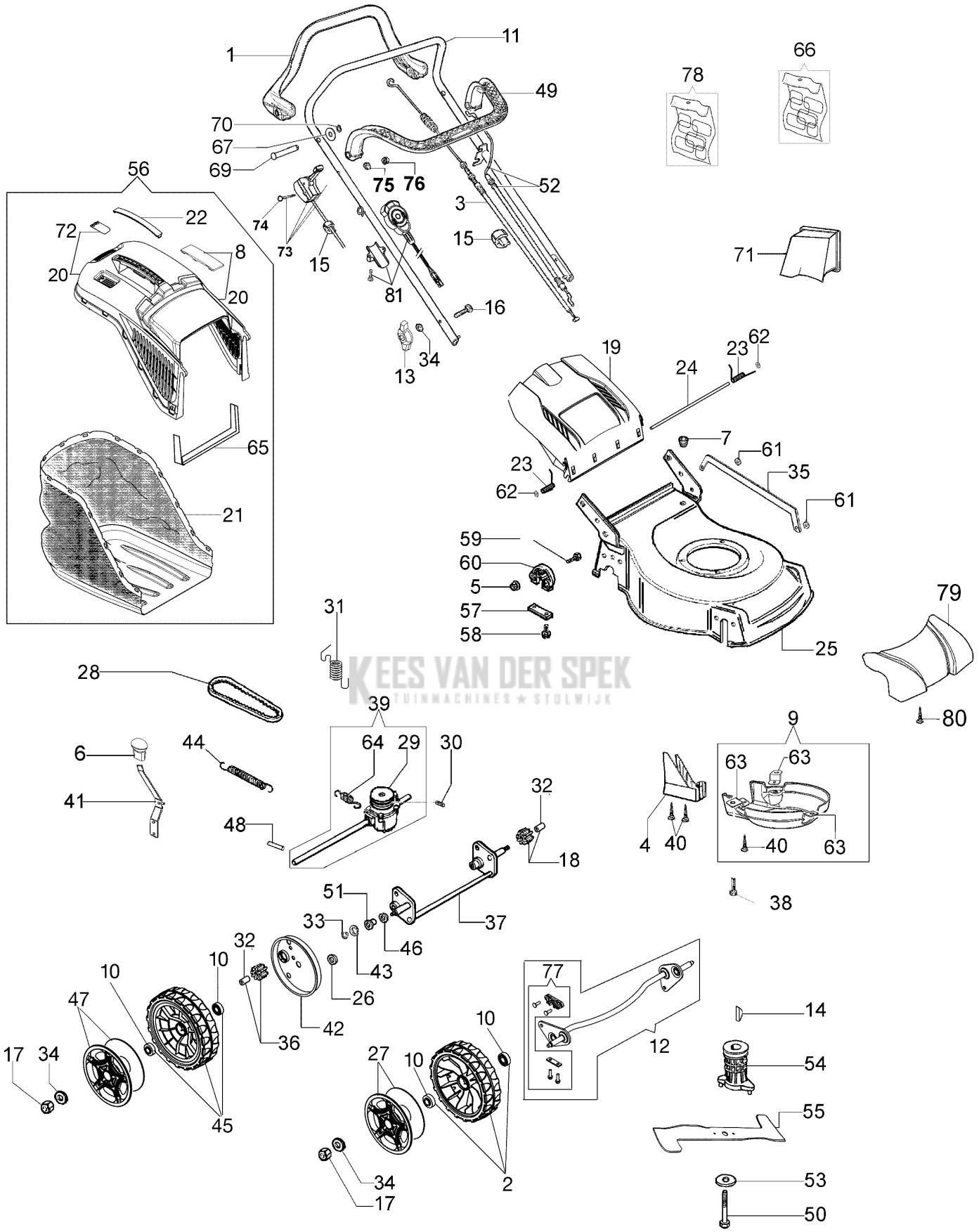

KEES VAN DER SPEK
TUINMACHINES ★ STOLWIJK

Copyright EMAK S.P.A.

Ref.Nu	Qty	Part number	Description	Validity from	Validity till	Notes	Bulletin
1	1	66060398BR	Traction lever				
2	2	66070724R	Complete wheel				
3	1	66070653R	Traction cable				
4	1	66110099R	Guard				
5	1	3914006R	Nut				
6	1	66110684	Handle				
7	1	66030038	Grommet				
8	1	66070466R	Lock				
9	1	66070233A	Guard kit				
10	8	66070497R	Bearing				
11	1	66070999R	Handlebar				
12	1	66070748	Axle kit				
13	2	66070944R	Tightening handle				
14	1	8202126R	Key				
15	2	66060231	Band				
16	2	3910015R	Screw				
17	4	3933032R	Nut				
18	1	66070437R	Left sprocket				
19	1	66110753R	Shutter				
20	1	66072047R	Frame				
21	1	66070876R	Grassbag				
22	1	66070522R	Cover				
23	1	66110609A	Kit spring				
24	1	66110026R	Deflector axle				
25	1	66110763	Deck				
26	2	3916015R	Washer				
27	2	66070849R	Wheel cover				
28	1	66030037R	Belt				
29	1	66070450R	Pulley				
30	1	3022020R	Plug				
31	1	66070652R	Spring				
32	2	66070435R	Bushing				
33	1	3024012R	Snap ring				
34	7	3916008R	Washer				
35	2	66110100	Rod				
36	1	66070436R	Right sprocket				
37	1	66070013C	Rear axle				
38	3	3806076R	Screw				
39	1	66070755A	Transmission				
40	2	011200035R	Screw				
41	1	66070018	Lever				
42	2	66070060R	Wheel cover				
43	1	66030044	Spacer				
44	1	66070036R	Spring				
45	2	66070723R	Complete wheel				
46	2	8202311R	Ring				

KEES VAN DER SPEK
TUINMACHINES ★ STOLWIJK

Copyright EMAK S.P.A.

Ref.Nu	Qty	Part number	Description	Validity from	Validity till	Notes	Bulletin
47	2	66070885R	Wheel cover				
48	1	66060010R	Roller				
49	1	66060316AR	Brake lever				
50	1	3906150R	Screw				
51	2	66060030R	Bushing				
52	1	66030276R	Engine break cable				
53	1	66060384R	Washer				
54	1	66030256R	Hub Ø22,2mm				
55	1	66110594R	Mulching blade				
56	1	66070905	Grassbag kit				
57	2	66030039	Plate				
58	4	3960031R	Screw				
59	6	3801022R	Screw				
60	2	66030049AR	Support				
61	2	3045035R	Retainer washer				
62	2	3045034R	Retainer washer				
63	3	66070228R	Support				
64	1	66070099R	Spring				
65	1	66070133R	Support				
66	1	66110680	Labels kit				
67	2	3064037	Washer				
69	2	66060381BR	Pin				
70	2	3024006	Snap ring				
71	1	66110127R	Mulching cap				
72	1	66070521R	Shutter				
73	1	66060164CR	Complete throttle				
74	1	3906053	Screw				
75	1	3916006R	Washer				
76	1	3914006R	Nut				
77	1	66070744	Support set				
78	1	66110795	Labels kit			Motore; Engine	
79	1	66070941R	Guard				
80	2	3960137R	Screw				
81	1	3044055R	Starting switch				

KEES VAN DER SPEK
TUINMACHINES ★ STOLWIJK

Copyright EMAK S.P.A.

9*

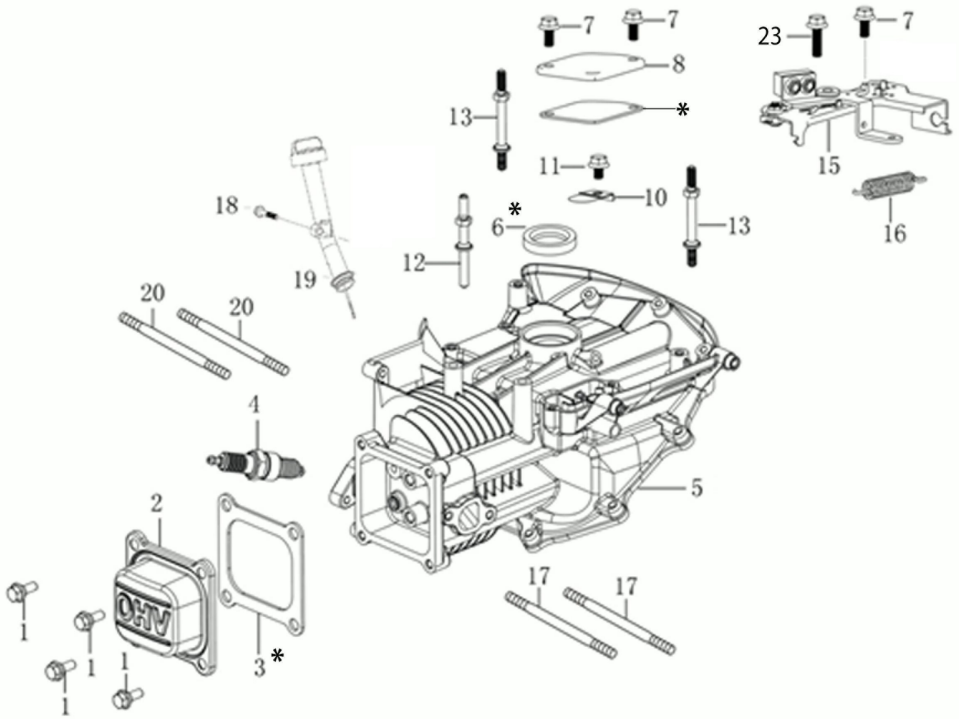

KEES VAN DER SPEK
TUINMACHINES ★ STOLWIJK

Copyright EMAK S.P.A.

Ref.Nu	Qty	Part number	Description	Validity from	Validity till	Notes	Bulletin
1	4	L66150393	Screw				
2	1	L66151522	Cover				
3	1	L66151523	Gasket				
4	1	3055123	Spark plug				
5	1	L66151524	Crankcase				
6	1	L66150409	Seal ring				
7	3	L66150464	Screw				
8	1	L66151525	Cap				
9	1	L66151570	Gasket set				
10	1	L66150410	Reed valve				
11	1	L66151526	Screw				
12	1	L66151527	Stud				
13	2	L66151528	Stud				
15	1	L66151975	Brake				
16	1	L66151531	Spring				
17	2	L66151532	Stud				
18	1	L66150453	Screw				
19	1	L66151533	Oil cap assy				
20	2	L66151534	Stud				
23	1	L66150456	Screw				

KEES VAN DER SPEK
TUINMACHINES ★ STOLWIJK

Copyright EMAK S.P.A.

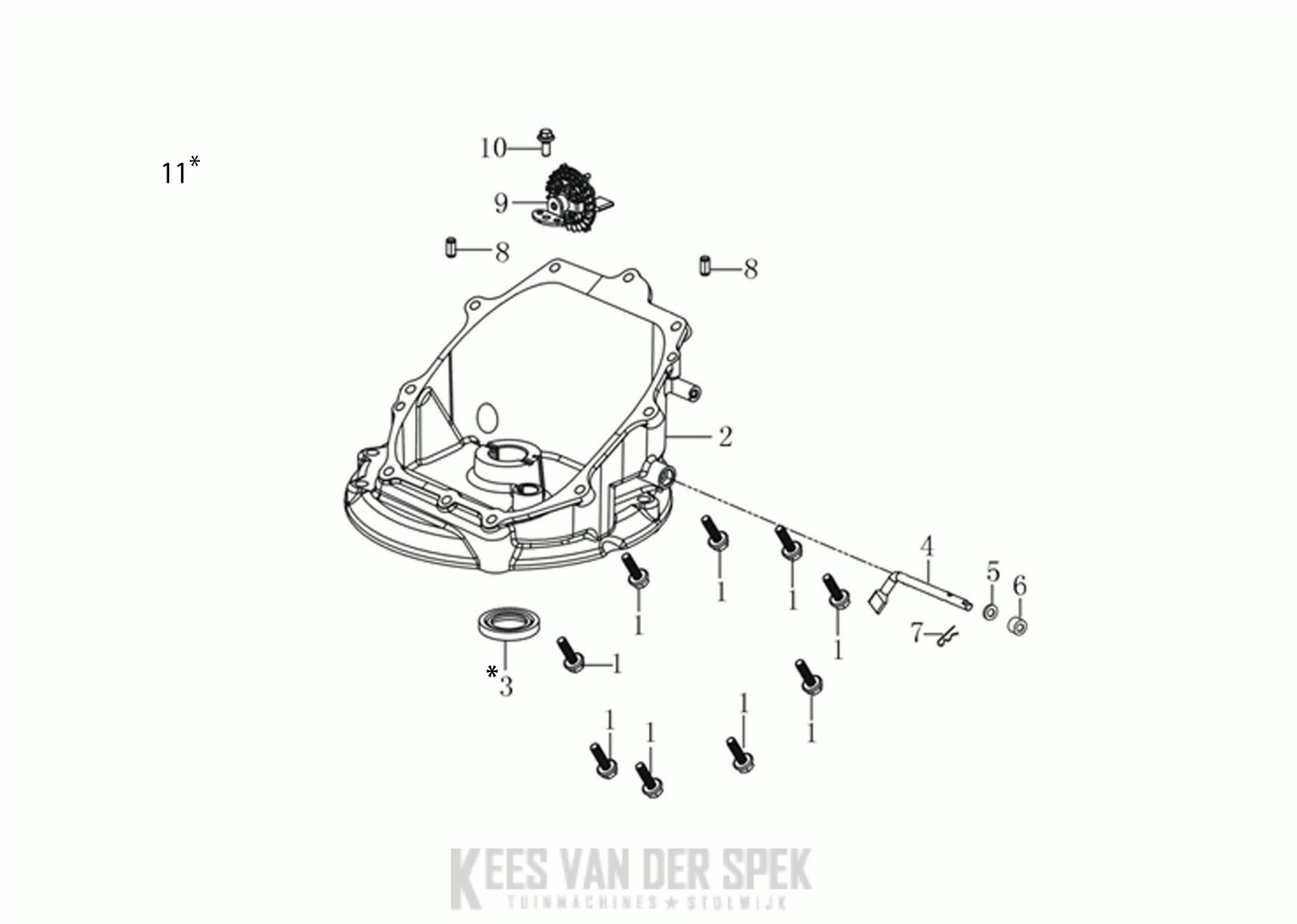

KEES VAN DER SPEK
TUINMACHINES ★ STOLWIJK

Copyright EMAK S.P.A.

Ref.Nu	Qty	Part number	Description	Validity from	Validity till	Notes	Bulletin
1	9	L66150817	Bolt				
2	1	L66151537	Crankcase cover				
3	1	L66150462	Gasket				
4	1	L66151538	Governor arm shaft				
5	1	L66150035	Washer				
6	1	L66150419	Gasket				
7	1	L66150353	Plug				
8	2	L66151539	Pin				
9	1	L66151540	Governor				
10	1	L66150729	Screw				
11	1	L66151570	Gasket set				

KEES VAN DER SPEK
TUINMACHINES ★ STOLWIJK

Copyright EMAK S.P.A.

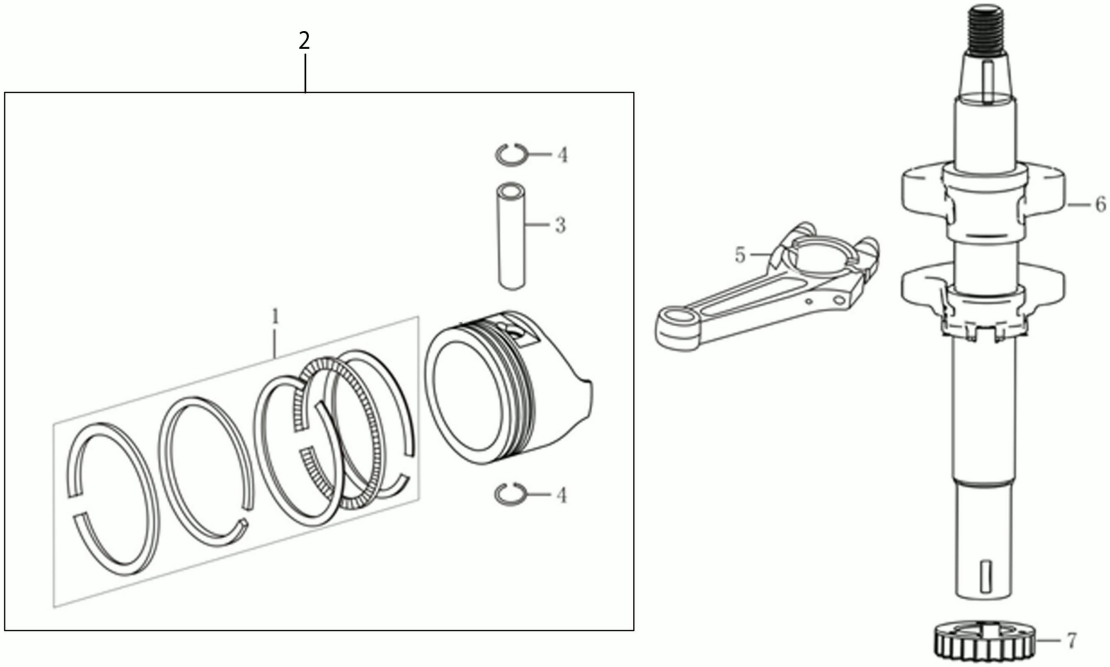

KEES VAN DER SPEK
TUINMACHINES ★ STOLWIJK

Copyright EMAK S.P.A.

Illustratie Shaft + piston

Ref.Nu	Qty	Part number	Description	Validity from	Validity till	Notes	Bulletin
1	1	L66151541	Piston ring set				
2	1	L66151571	Piston assy				
3	1	L66150342	Piston pin				
4	2	L66150372	Retainer washer				
5	1	L66151576	Connecting rod				
6	1	L66151577	Crankshaft				
7	1	L66151544	Slide				

KEES VAN DER SPEK
TUINMACHINES ★ STOLWIJK

Copyright EMAK S.P.A.

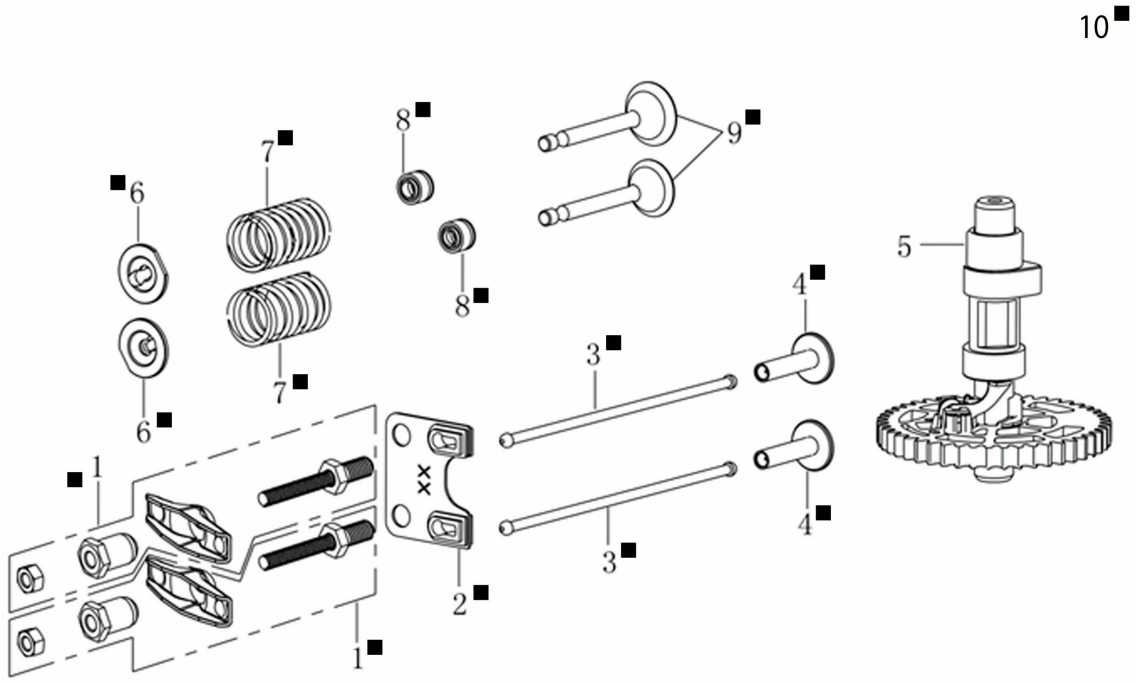

KEES VAN DER SPEK
TUINMACHINES ★ STOLWIJK

Copyright EMAK S.P.A.

Illustratie Reed valve kit

Ref.Nu	Qty	Part number	Description	Validity from	Validity till	Notes	Bulletin
1	2	L66151545	Compensator				
2	1	L66151546	Plate				
3	2	L66150402	Equalizer rod				
4	2	L66151547	Slide				
5	1	L66151548	Camshaft assy				
6	2	L66150398	Spring holder				
7	2	L66150522	Valves spring				
8	2	L66150367	Seal				
9	1	L66150400	Suction/exhaust valve kit				
10	1	L66151572	Reed valve kit				

KEES VAN DER SPEK
TUINMACHINES ★ STOLWIJK

Copyright EMAK S.P.A.

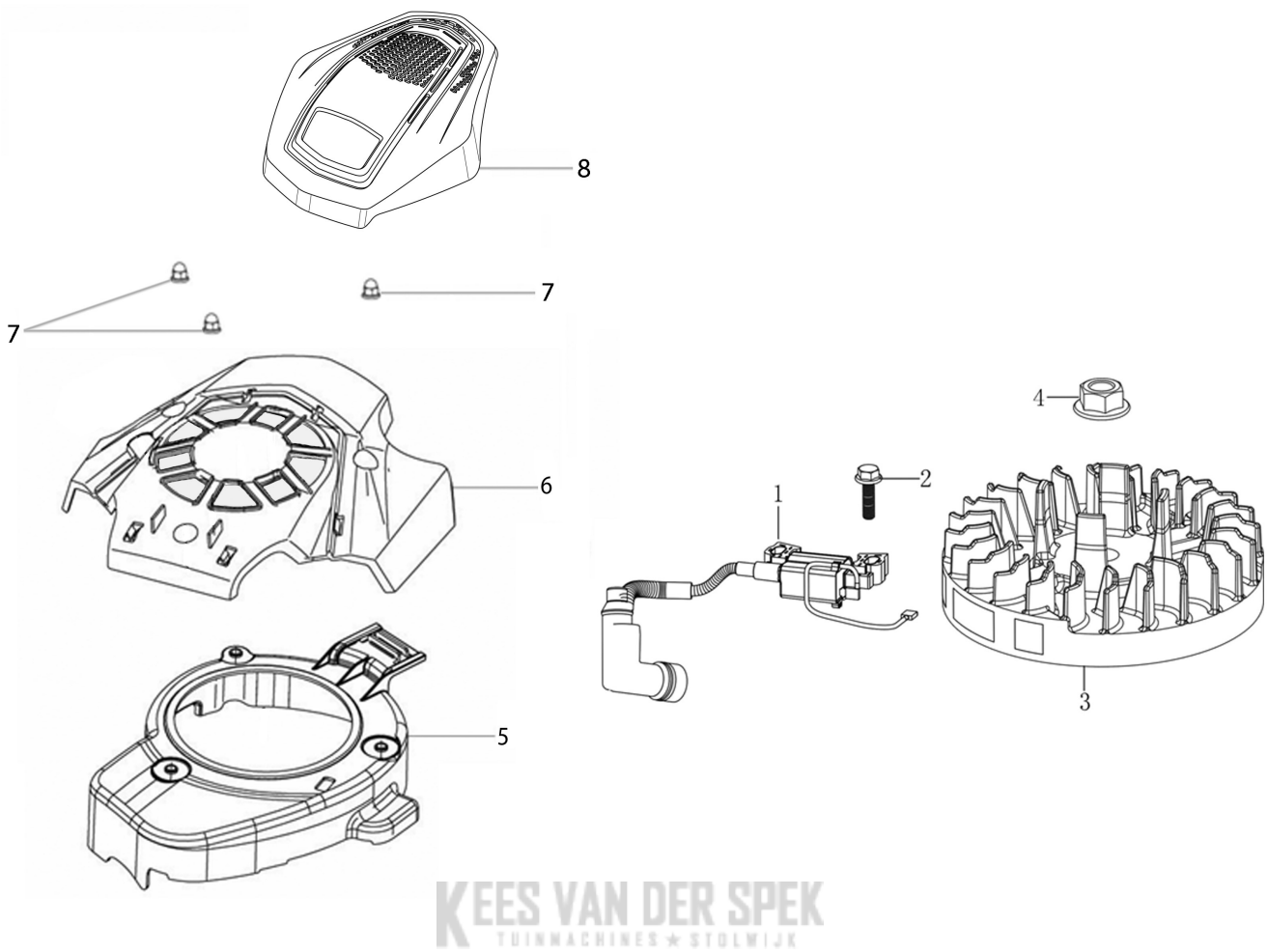

KEES VAN DER SPEK
TUINMACHINES ★ STOLWIJK

Copyright EMAK S.P.A.

Ref.Nu	Qty	Part number	Description	Validity from	Validity till	Notes	Bulletin
1	1	L66151551	Ignition coil				
2	1	L66150817	Bolt				
3	1	L66151969	Flywheel				
4	1	L66150376	Nut				
5	1	L66151550	Cover				
6	1	L66151968	Cover				
7	3	L66151976	Nut				
8	1	3075226R	Cover				MO_0001_12/1

KEES VAN DER SPEK
TUINMACHINES ★ STOLWIJK

Copyright EMAK S.P.A.

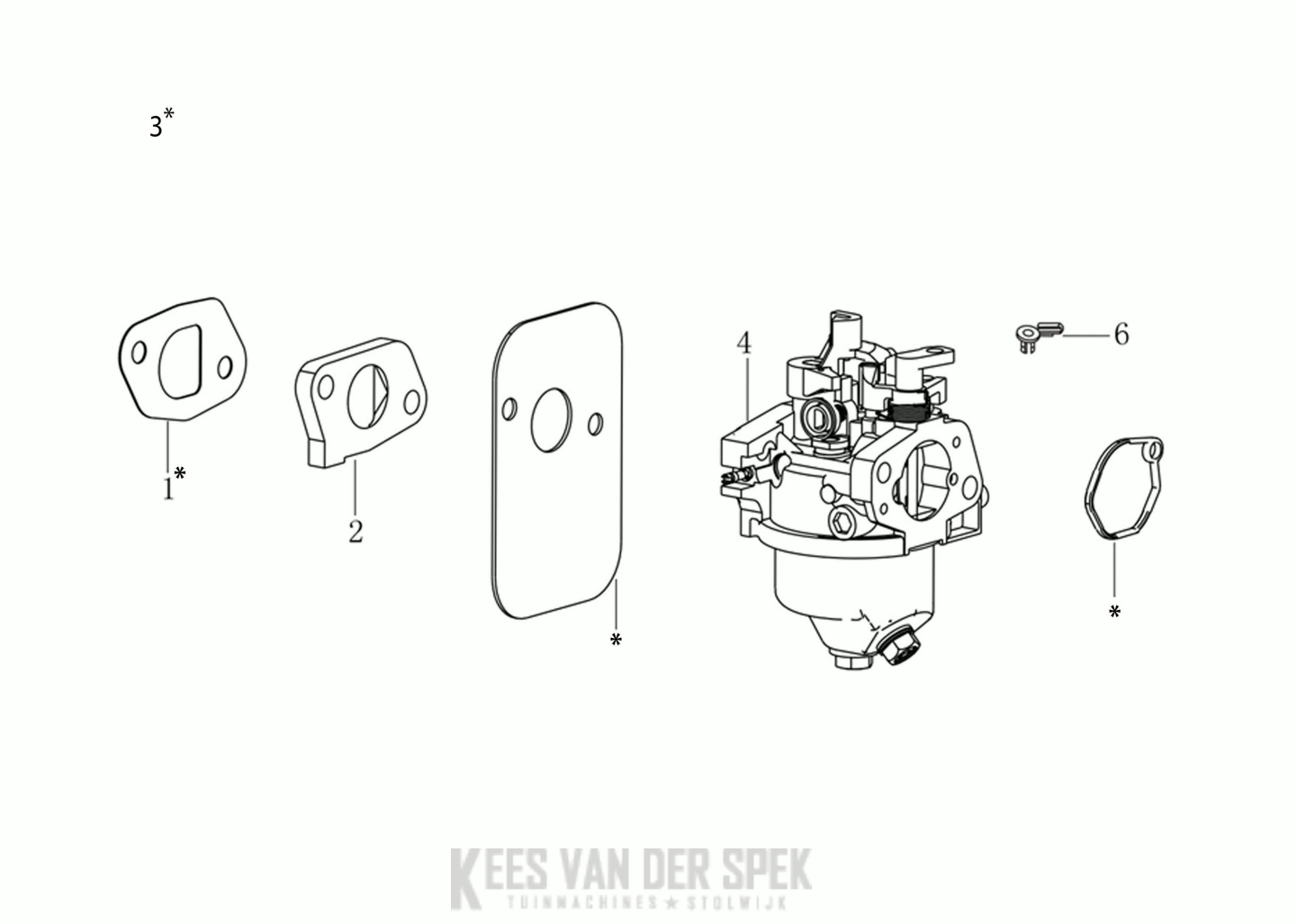

KEES VAN DER SPEK
TUINMACHINES ★ STOLWIJK

Copyright EMAK S.P.A.

Ref.Nu	Qty	Part number	Description	Validity from	Validity till	Notes	Bulletin
1	1	L66151553	Gasket				
2	1	L66150433	Insulator				
3	1	L66151570	Gasket set				
4	1	L66151578	Carburetor				
6	1	L66150731	Shoe				

KEES VAN DER SPEK
TUINMACHINES ★ STOLWIJK

Copyright EMAK S.P.A.

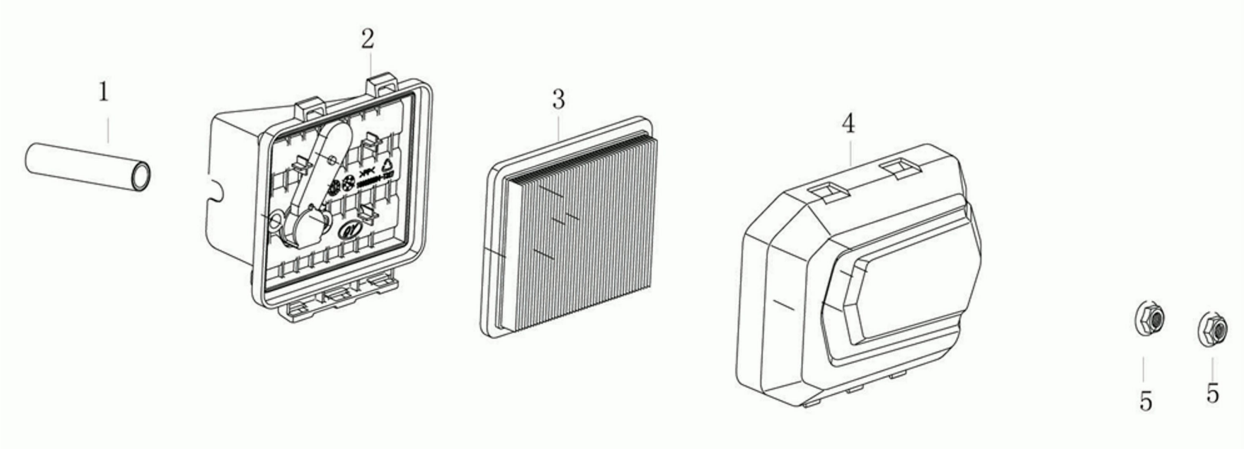

KEES VAN DER SPEK
TUINMACHINES ★ STOLWIJK

Copyright EMAK S.P.A.

Illustratie Air filter

Ref.Nu	Qty	Part number	Description	Validity from	Validity till	Notes	Bulletin
1	1	L66151555	Tube				
2	1	L66151556	Filter support				
3	1	L66150715	Air filter				
4	1	L66151557	Filter cover				
5	2	004400959R	Nut				

KEES VAN DER SPEK
TUINMACHINES ★ STOLWIJK

Copyright EMAK S.P.A.

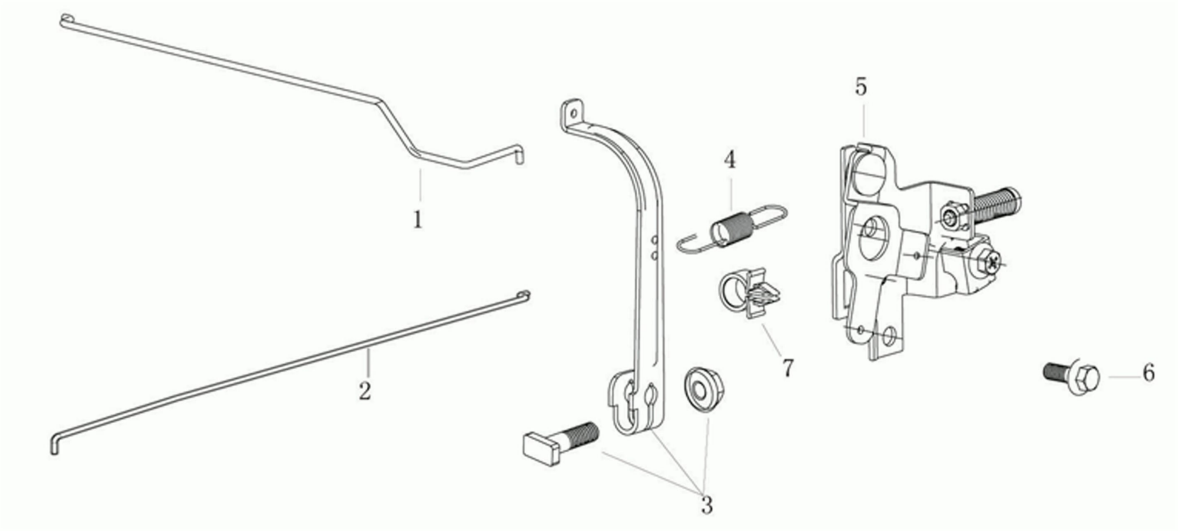

KEES VAN DER SPEK
TUINMACHINES ★ STOLWIJK

Copyright EMAK S.P.A.

Ref.Nu	Qty	Part number	Description	Validity from	Validity till	Notes	Bulletin
1	1	L66151558	Rod				
2	1	L66151559	Throttle rod				
3	1	L66151560	Control lever				
4	1	L66151579	Spring				
5	1	L66151580	Complete lever				
6	1	L66150729	Screw				
7	1	L66150440	Clip				

KEES VAN DER SPEK
TUINMACHINES ★ STOLWIJK

Copyright EMAK S.P.A.

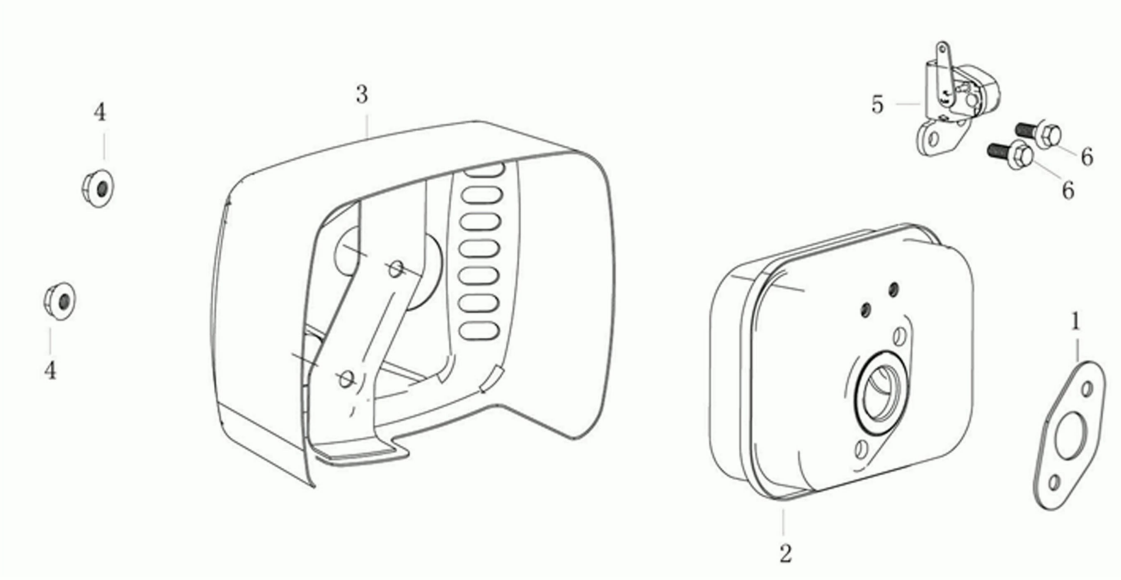

KEES VAN DER SPEK
TUINMACHINES ★ STOLWIJK

Copyright EMAK S.P.A.

Ref.Nu	Qty	Part number	Description	Validity from	Validity till	Notes	Bulletin
1	1	L66151563	Gasket				
2	1	L66151564	Muffler				
3	1	L66151565	Cover				
4	2	L66150185	Nut				
5	1	L66151566	Control start				
6	2	L66150729	Screw				

KEES VAN DER SPEK
TUINMACHINES ★ STOLWIJK

Copyright EMAK S.P.A.

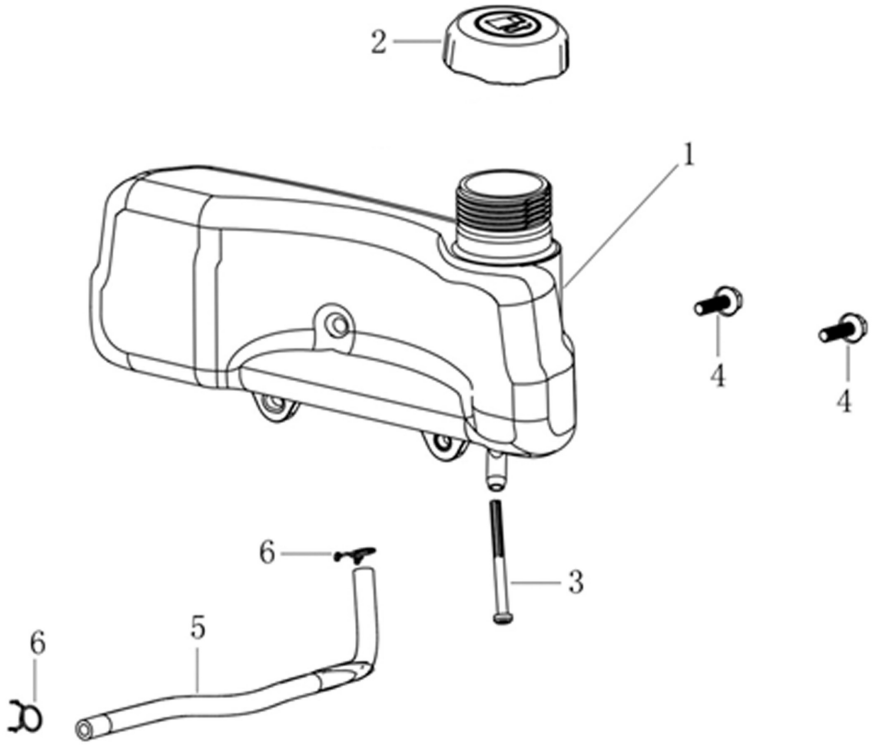

KEES VAN DER SPEK
TUINMACHINES ★ STOLWIJK

Copyright EMAK S.P.A.

Illustratie Tank

Ref.Nu	Qty	Part number	Description	Validity from	Validity till	Notes	Bulletin
1	1	L66151967	Complete tank				
2	1	L66151568	Tank cap				
3	1	L66150439	Filter				
4	2	L66150456	Screw				
5	1	L66151569	Tube				
6	2	L66150435	Clip				

KEES VAN DER SPEK
TUINMACHINES ★ STOLWIJK

Copyright EMAK S.P.A.

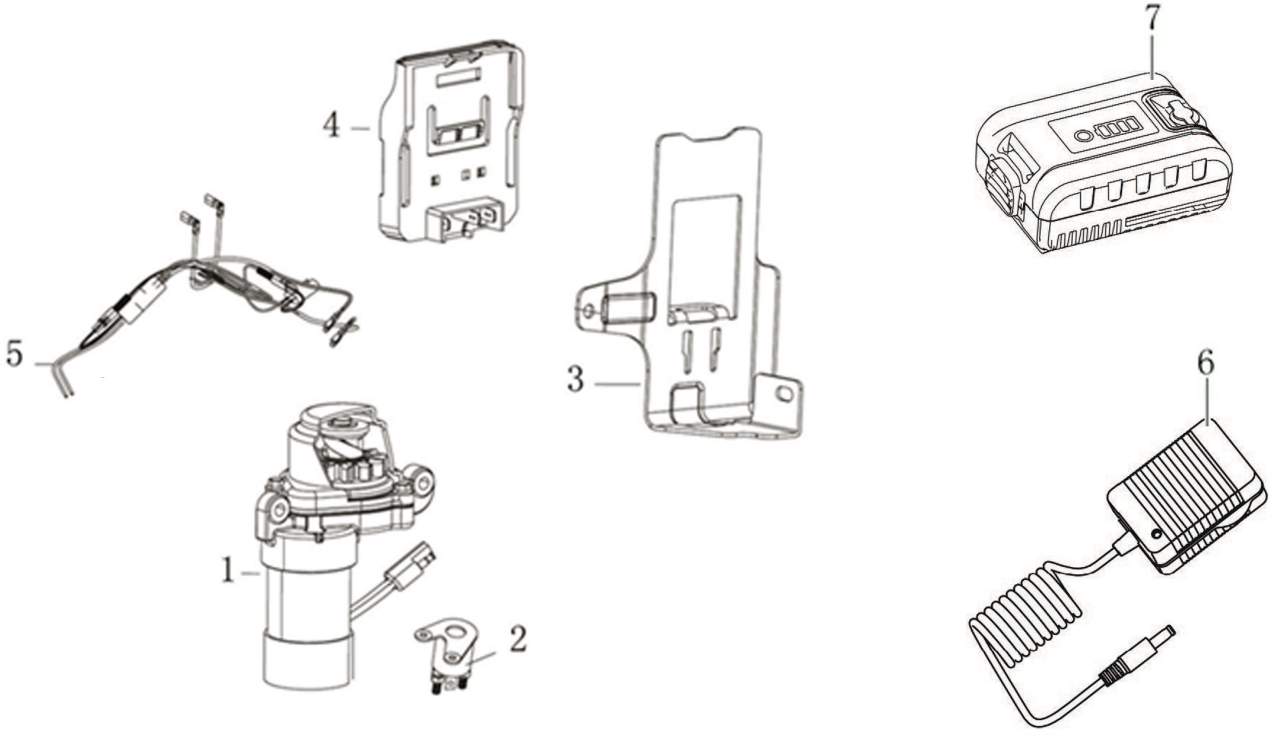

KEES VAN DER SPEK
TUINMACHINES ★ STOLWIJK

Copyright EMAK S.P.A.

Illustratie Start motor assy

Ref.Nu	Qty	Part number	Description	Validity from	Validity till	Notes	Bulletin
1	1	L66151970	Start motor assy				
2	1	L66151972	Starter relay				
3	1	L66151973	Bracket				
4	1	L66151974	Battery support				
5	1	L66151971	Starter cable				
6	1	3075273	Battery charger				
7	1	3075272	Battery				

KEES VAN DER SPEK
TUINMACHINES ★ STOLWIJK

Copyright EMAK S.P.A.