TG 2470 P Hedgetrimmer

Documenten

Engine

Ignition system

Tank and air filter

Handle

Carburetor

Blades assy

KEES VAN DER SPEK
TUINMACHINES ★ STOLWIJK

Copyright EMAK S.P.A.

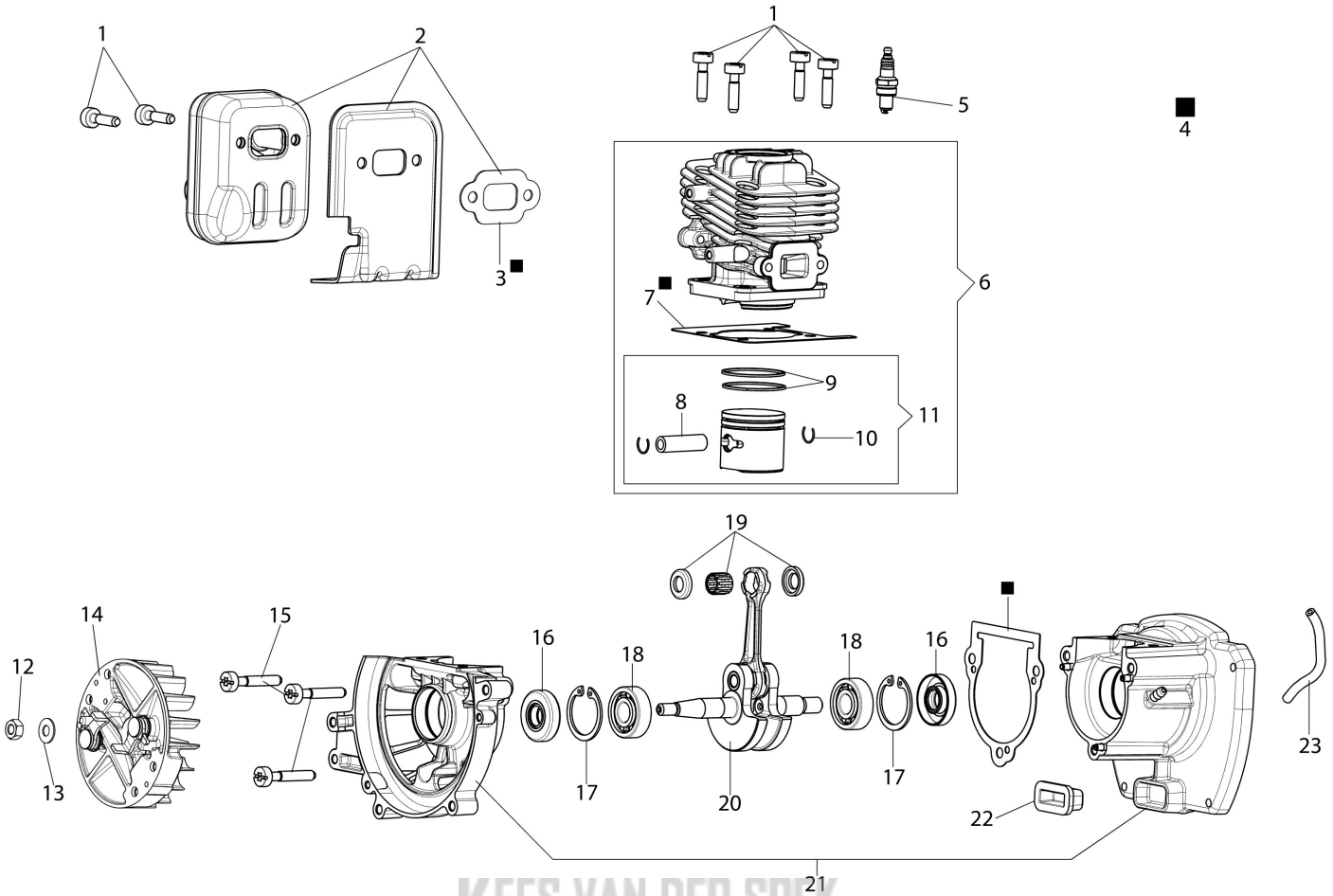

KEES VAN DER SPEK
TUINMACHINES ★ STOLWIJK

Copyright EMAK S.P.A.

Ref.Nu	Qty	Part number	Description	Validity from	Validity till	Notes	Bulletin
1	6	3891048R	Screw				
2	1	58090096	Muffler assy				
3	1	61370634R	Gasket				
4	1	58090098	Gasket set				
5	1	3055112	Spark plug				
6	1	61370606	Complete cylinder Ø32				
7	1	58090036AR	Gasket				
8	1	58070019R	Piston pin				
9	2	61370575R	Piston ring				
10	2	58070166BR	Ring				
11	1	61370605	Piston assy Ø32				
12	1	3912014R	Nut				
13	1	3819031R	Washer				
14	1	58090005AR	Flywheel				
15	3	3891057R	Screw				
16	2	3050042R	Seal ring				
17	2	3025018R	Ring				
18	2	3034029R	Bearing				
19	1	61370254	Set roller cage and washer				
20	1	58090033R	Crankshaft				
21	1	58090002AR	Crankcase assy				
22	1	58090059R	Support				
23	1	094600126	Tube				

KEES VAN DER SPEK
TUINMACHINES ★ STOLWIJK

Copyright EMAK S.P.A.

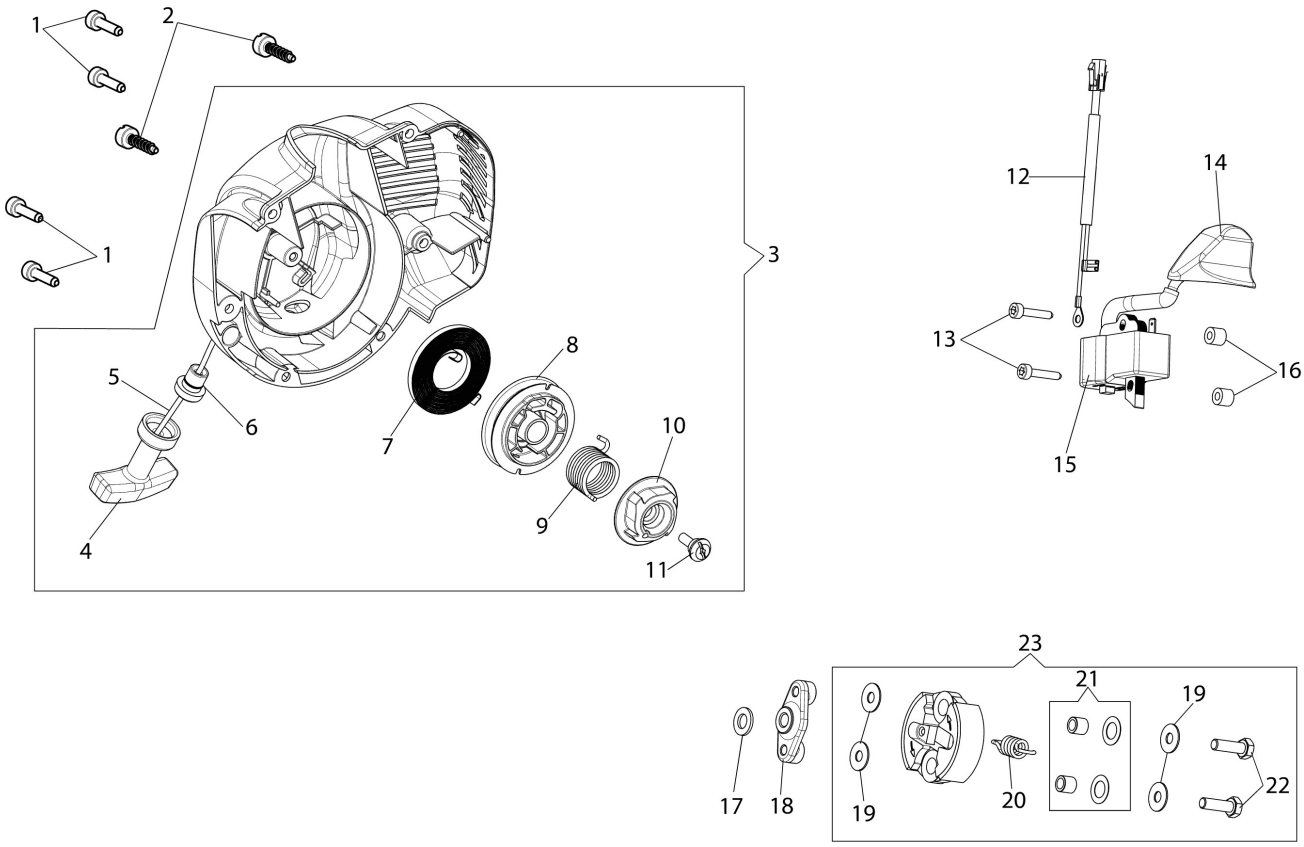

KEES VAN DER SPEK
TUINMACHINES ★ STOLWIJK

Copyright EMAK S.P.A.

Ref.Nu	Qty	Part number	Description	Validity from	Validity till	Notes	Bulletin
1	4	3891038R	Screw				
2	2	3893060R	Screw				
3	1	58090048R	Starter assy				
4	1	093500397	Starter handle				
5	1	58070054R	Starter rope				
6	1	072700089R	Bushing				
7	1	61070036R	Spring				
8	1	58090016R	Starter pulley				
9	1	58090019R	Starter spring				
10	1	58090018R	Sprocket				
11	1	50160024	Screw				
12	1	58090061R	Cable				
13	2	3891020R	Screw				
14	1	58070053R	Spark plug cap				
15	1	2501023BR	Ignition coil				
16	2	50160218AR	Spacer				
17	1	3064034	Washer				
18	1	58090003R	Clutch driver				
19	4	3918007R	Washer				
20	1	61070090R	Spring				
21	1	61372171R	Set spacer				
22	2	015000044R	Screw				
23	1	61370557	Complete clutch				

KEES VAN DER SPEK
TUINMACHINES ★ STOLWIJK

Copyright EMAK S.P.A.

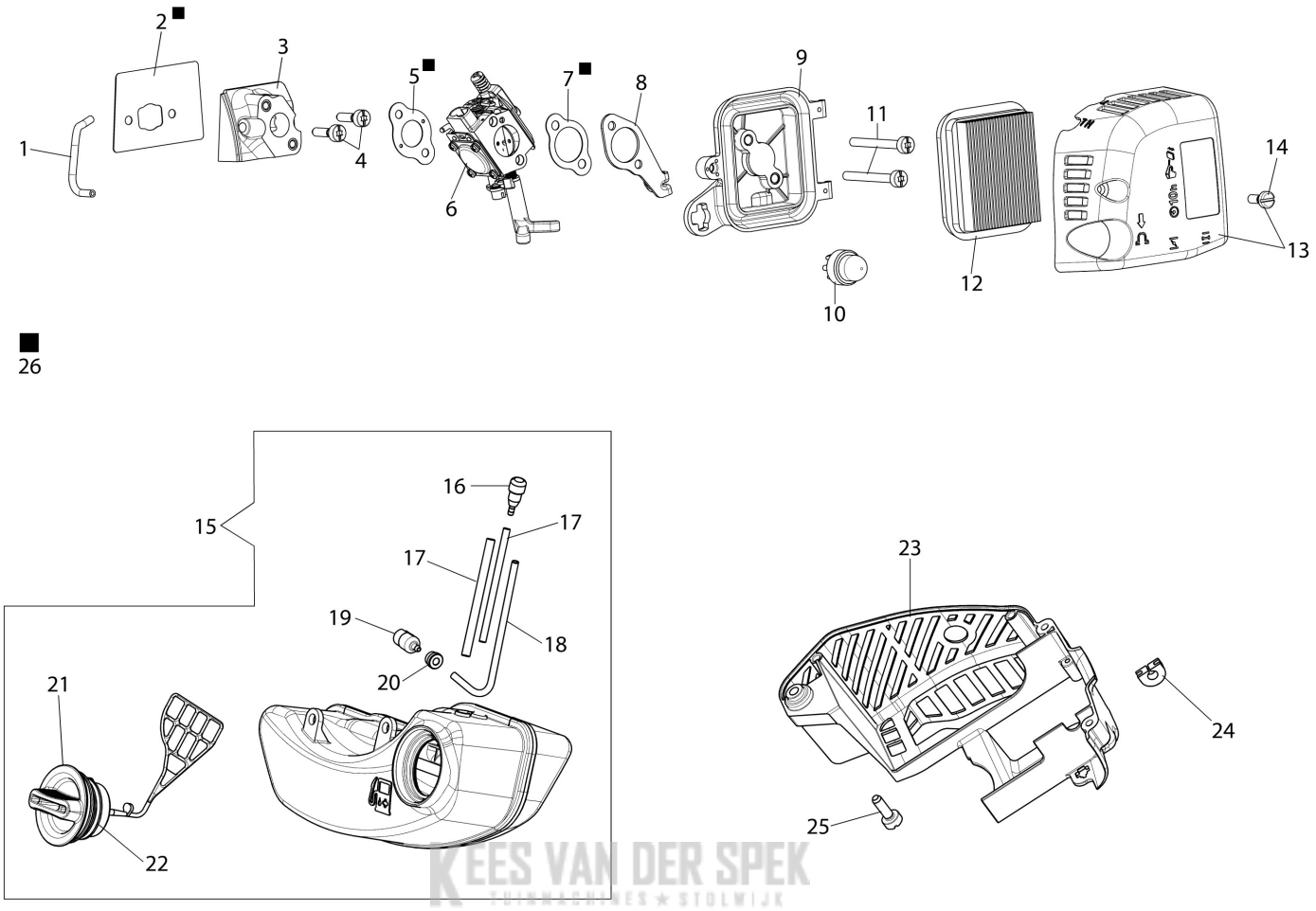

KEES VAN DER SPEK
TUINMACHINES ★ STOLWIJK

Copyright EMAK S.P.A.

Ref.Nu	Qty	Part number	Description	Validity from	Validity till	Notes	Bulletin
1	1	58090060R	Tube				
2	1	58090039AR	Gasket				
3	1	58090040R	Flange				
4	2	3891048R	Screw				
5	1	61200196AR	Gasket				
6	1	2318008CR	Carburetor				
7	1	56570058R	Gasket				
8	1	58090044AR	Bracket				
9	1	58092007BR	Air filter support set				
10	1	2318817R	Air purge				
11	2	3891063R	Screw				
12	1	61170016R	Air filter				
13	1	58090097	Air filter cover				
14	1	58070223R	Screw				
15	1	58090100	Complete tank				
16	1	61070011AR	Breather valve				
17	2	50080134R	Tube				
18	1	3073023R	Tube				
19	1	094600450R	Fuel filter				
20	1	58070179AR	Washer				
21	1	50072009R	Cap				
22	1	099900090R	Ring				
23	2	58090009AR	Lower cover				
24	1	005000347AR	Grommet				
25	1	3891038R	Screw				
26	1	58090098	Gasket set				

KEES VAN DER SPEK
TUINMACHINES ★ STOLWIJK

Copyright EMAK S.P.A.

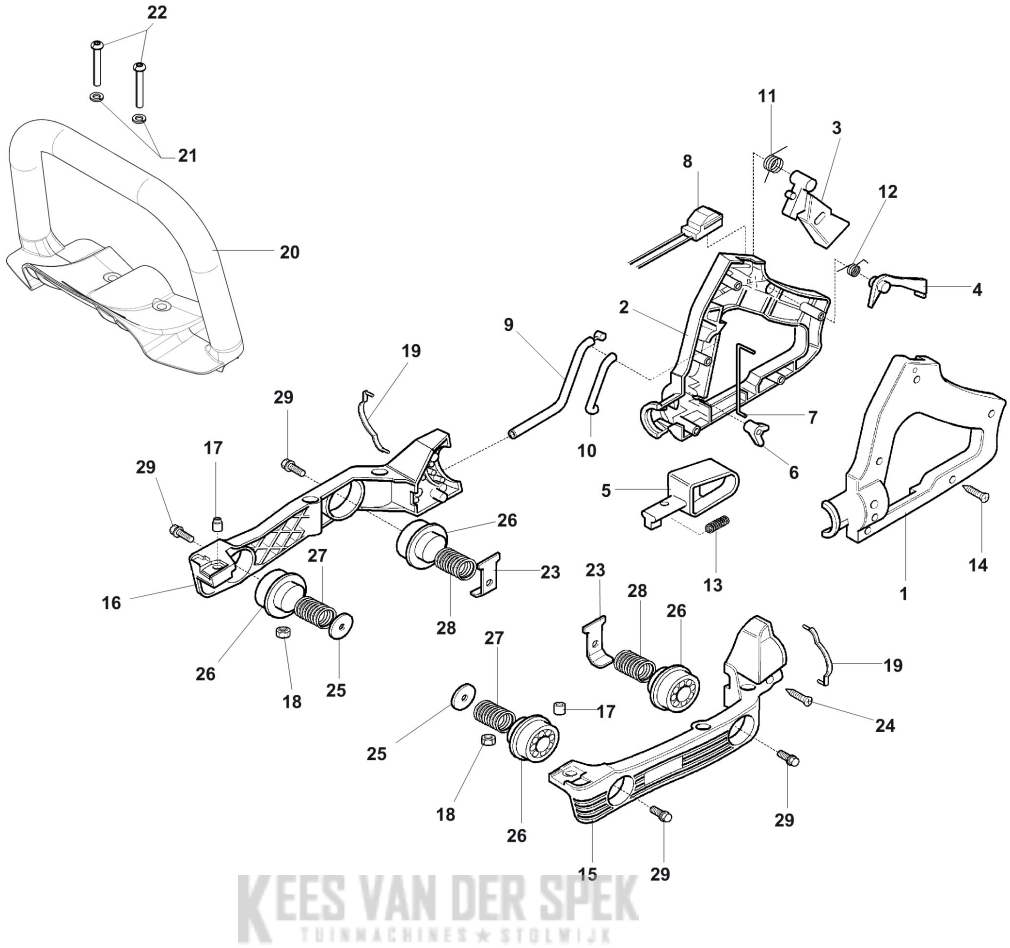

KEES VAN DER SPEK
TUINMACHINES ★ STOLWIJK

Copyright EMAK S.P.A.

Ref.Nu	Qty	Part number	Description	Validity from	Validity till	Notes	Bulletin
1	1	W58040032	Half grip left				
2	1	W58040033	Half grip right				
3	1	W58040034	Throttle lever				
4	1	W58040035	Lever				
5	1	W58040036	Lever				
6	1	W58040037	Pin				
7	1	W58040038	Throttle rod				
8	1	W58070014R	Switch				
9	1	W58070015R	Throttle cable				
10	1	W58040041	Spacer				
11	1	W58040042	Spring				
12	1	W58040043	Spring				
13	1	W58040044	Spring				
14	5	W58040045	Screw				
15	1	W58040046	Support left				
16	1	W58040047	Support right				
17	2	W58040048	Spacer				
18	2	W58040023R	Nut				
19	2	W58040050	Gasket				
20	1	58090035BR	Front handle				
21	2	3819010R	Washer				
22	2	3901088R	Screw				
23	2	W58040063	Support				
24	3	W58040055	Screw				
25	1	W58040064	Washer				
26	4	W58040057R	Spring support				
27	2	W58040058R	Spring				
28	2	W58040059R	Spring				
29	4	W58040025	Screw				

KEES VAN DER SPEK
TUINMACHINES ★ STOLWIJK

Copyright EMAK S.P.A.

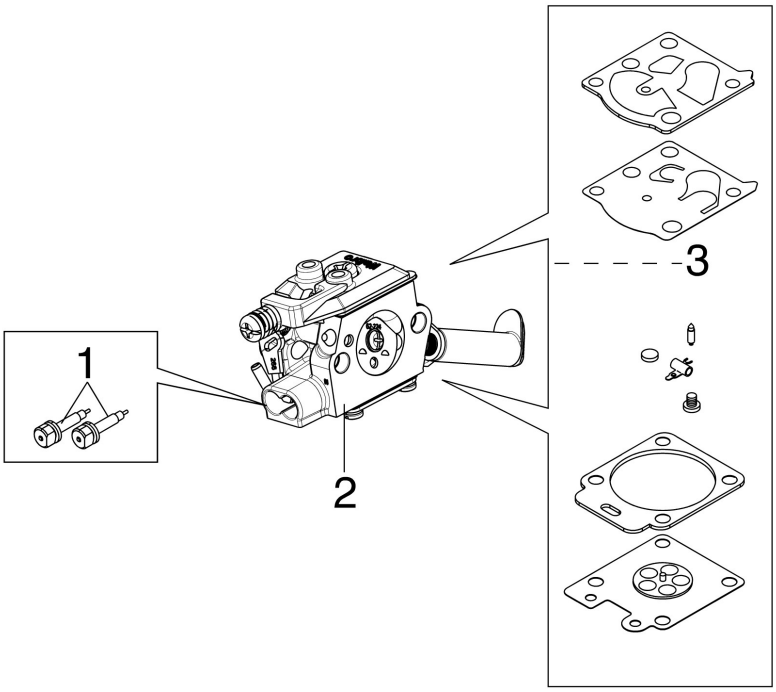

KEES VAN DER SPEK
TUINMACHINES ★ STOLWIJK

Copyright EMAK S.P.A.

Ref.Nu	Qty	Part number	Description	Validity from	Validity till	Notes	Bulletin
1	2	2318779	Adjust. screw MIN				
2	1	2318008CR	Carburetor				
3	1	2318671	Repair kit				

KEES VAN DER SPEK
TUINMACHINES ★ STOLWIJK

Copyright EMAK S.P.A.

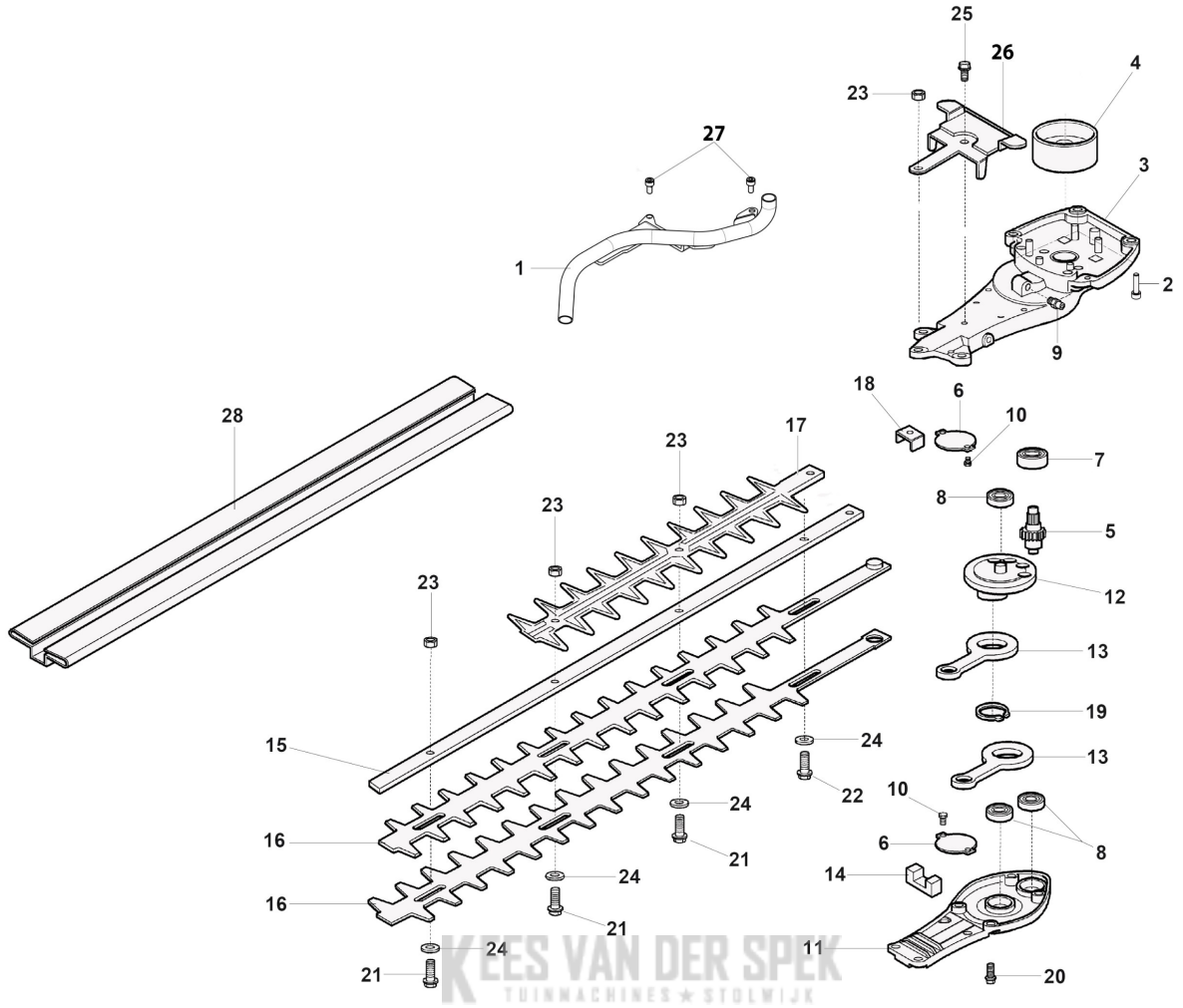

KEES VAN DER SPEK
TUINMACHINES ★ STOLWIJK

Copyright EMAK S.P.A.

Ref.Nu	Qty	Part number	Description	Validity from	Validity till	Notes	Bulletin
1	1	58090028BR	Exhaust pipe				
2	3	3801011R	Screw				
3	1	W58070012R	Upper case				
4	1	W58070011R	Clutch drum				
5	1	W58040005	Sprocket				
6	2	W58040006	Plate				
7	1	W58040007R	Bearing				
8	3	W58040008R	Bearing				
9	1	W58040009	Nipple				
10	1	W58040010	Screw				
11	1	W58040011	Cover				
12	1	W58040012	Chain sprocket				
13	2	W58040013R	Connecting rod				
14	1	W58040014	Felt				
15	1	W58040030	Blade guide 750mm				
16	2	W58070006R	Blade 750mm				
17	1	W58040082	Guard				
18	1	W58040018	Plate				
19	1	W58040019	Ring				
20	6	W58070013R	Screw				
21	3	W58040021R	Screw				
22	1	W58040022	Screw				
23	4	W58040023R	Nut				
24	4	W58040024R	Washer				
25	1	W58070010R	Screw				
26	1	W58040029	Bracket				
27	2	3801052R	Screw				
28	1	W58040028	Guard			60 cm	
28	1	58040167	Guard			75 cm	

KEES VAN DER SPEK
TUINMACHINES ★ STOLWIJK

Copyright EMAK S.P.A.