Husqvarna

SPARE PARTS LIST

PRESSURE WASHERS

KEES VAN DER SPEK

PW125, 2017-10

OVERVIEW

PW 125

2017.04.20
2017.08.03

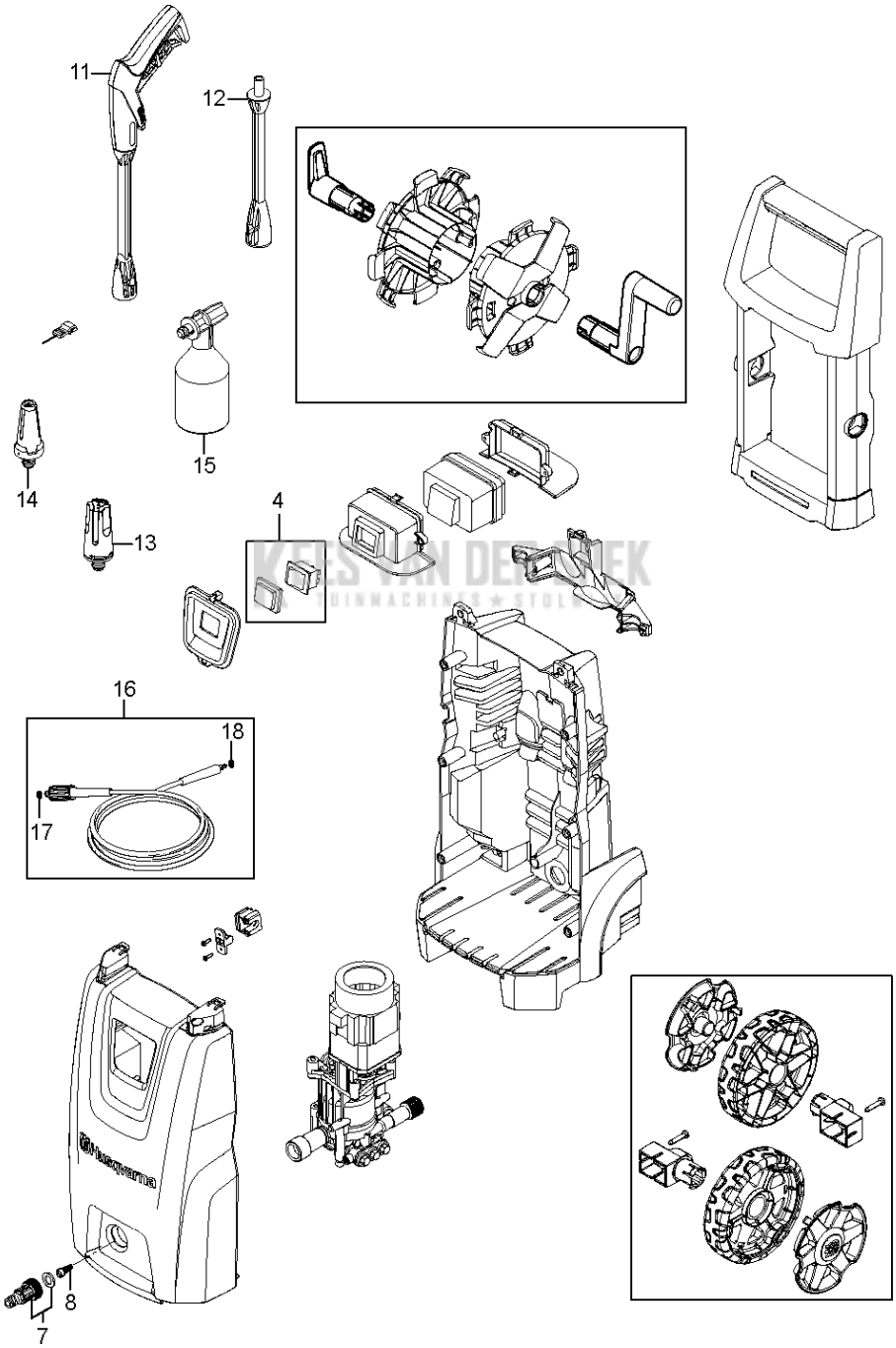

Ref	Part No	Description	Remark	QTY KIT
4	592 61 77-01	SWITCH	SWITCH CPL.	1
7	592 61 76-89	QUICK COUPLING	QUICK COUPLING MALE W. INTERNAL THREAD	1
8	592 61 76-98	STRAINER	STRAINER	1
11	592 61 76-28	GUN	G1 GUN DARK GREY	1
12	592 61 76-29	LANCE	G2 LANCE DARK GREY	1
13	592 61 76-07	NOZZLE	C&C POWERSPEED	1
14	592 61 76-84	NOZZLE	PR TORNADO DARK BLUE	1
15	592 61 76-06	NOZZLE	C&C FOAMSPRAYER WITH BOTTLE	1
16	592 61 76-40	HOSE	HOSE 7 M	1
17	592 61 76-03	O-RING	BAG WITH 10 O-RINGS 3001211	1
18	740 42 03-00	O-RING	O-RING 5.1X1.6 VITON SH 90	1

KEES VAN DER SPEK
TUINMACHINES ★ STOLWIJK

MOTOR PUMP

PW 125

2013.11.28
2017.03.21

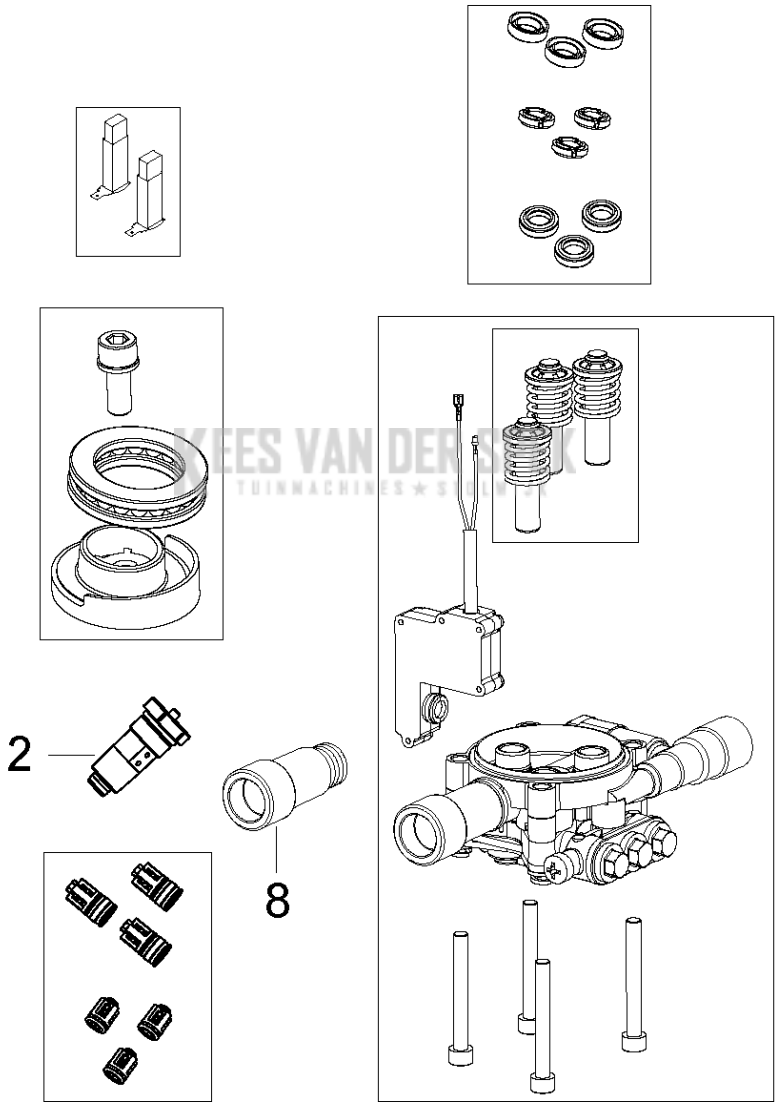

KEES VAN DER BEEK TUINMACHINES ★ SINCE 1

Ref	Part No	Description	Remark	QTY KIT
2	592 61 76-94	SWITCH	START STOP SYSTEM BIG	1
8	592 61 77-15	INLET	WATER INLET PLASTIC	1

KEES VAN DER SPEK
TUINMACHINES ★ STOLWIJK