IP 1250 S High-pressure washer

Documenten

Deck

Engine

Pump

Accessories

KEES VAN DER SPEK
TUINMACHINES ★ STOLWIJK

Copyright EMAK S.P.A.

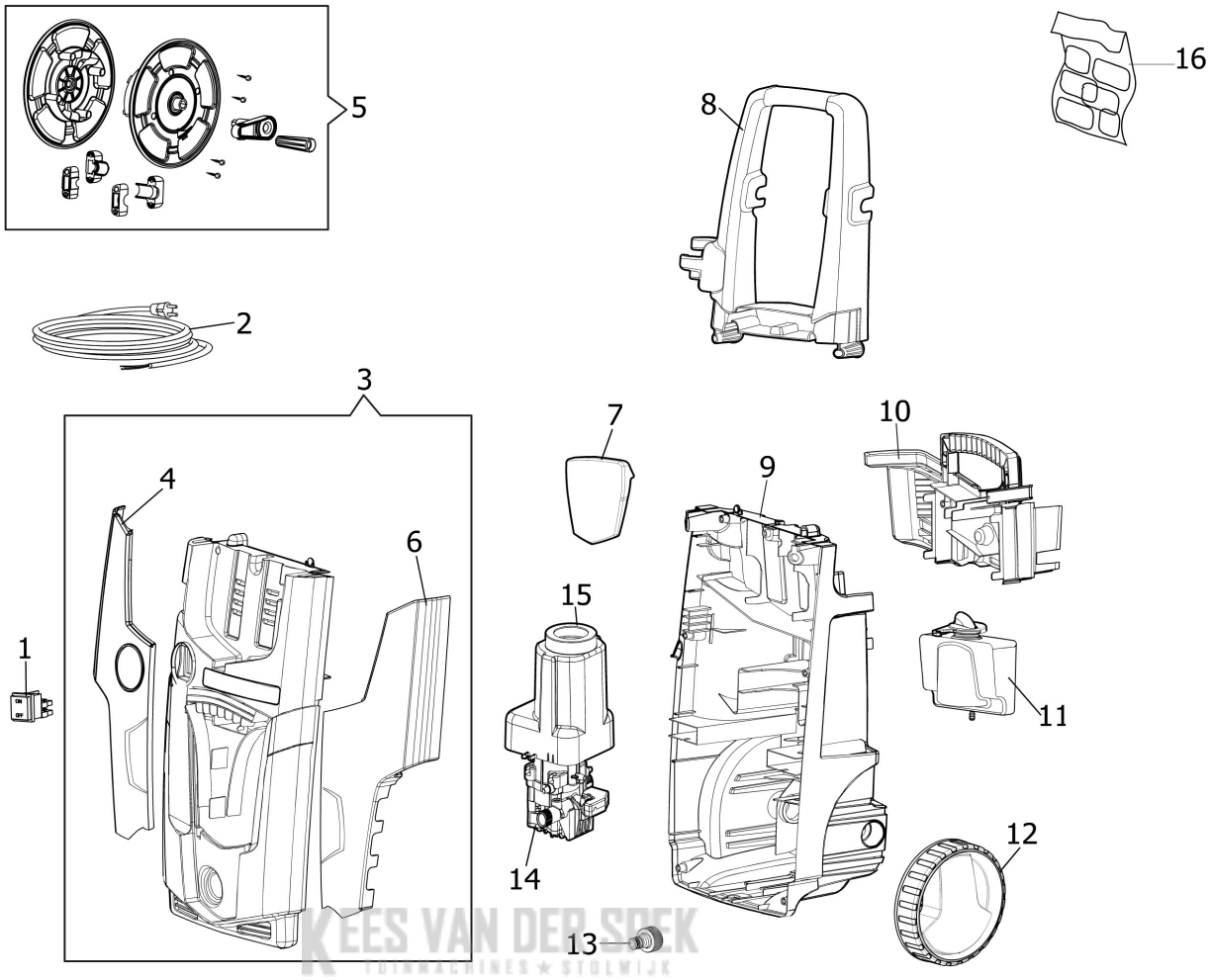

KEES VAN DER SPEK
TUINMACHINES ★ STOLWIJK

Copyright EMAK S.P.A.

Ref.Nu	Qty	Part number	Description	Validity from	Validity till	Notes	Bulletin
1	1	CH14100153	Switch				
2	1	CH04560483	Wire				
3	1	CH04790169	Cover kit			Frontale; Front	
4	1	CH04790169	Cover kit				
5	1	CH70020207	Hose reel kit				
6	1	CH04770521	Cover left				
7	1	CH04020546	Cover				
8	1	CH14110061	Handle				
9	1	CH04770502	Rear bonnet				
10	1	CH30020900	Accessories support				
11	1	CH30290060	Detergent tank kit				
12	2	CH28100126	Wheel				
13	1	CH28030325	Fittings				
14	1	CH73040223	Water pump				
15	1	CH04660078	Starter case				
16	1	301100005	Labels kit				

KEES VAN DER SPEK
TUINMACHINES ★ STOLWIJK

Copyright EMAK S.P.A.

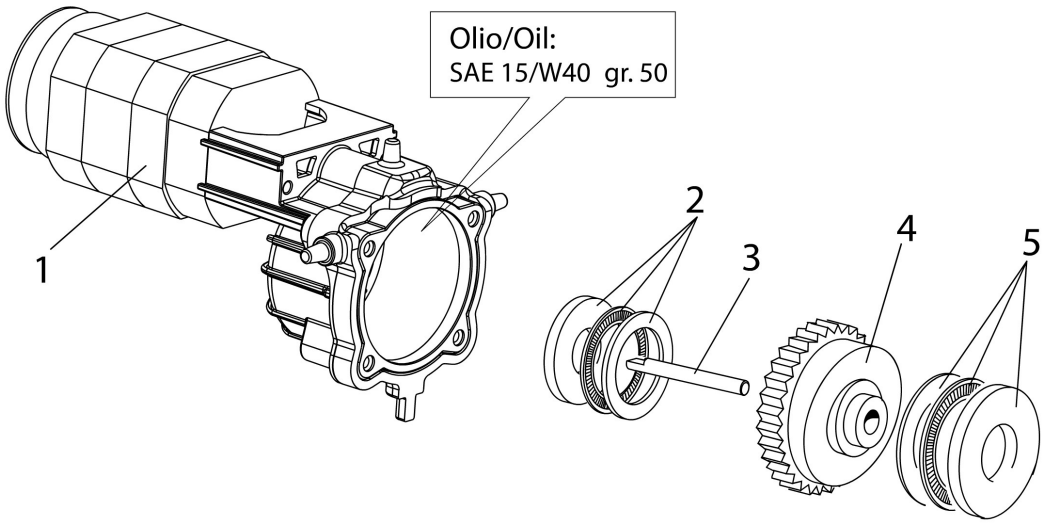

KEES VAN DER SPEK
TUINMACHINES ★ STOLWIJK

Copyright EMAK S.P.A.

Ref.Nu	Qty	Part number	Description	Validity from	Validity till	Notes	Bulletin
1	1	CH18310692	Electric motor				
2	1	CH04360038	Bearing				
3	1	CH24080076	Shaft				
4	1	CH00010725	Complete rim				
5	1	CH04360037	Bearing				

KEES VAN DER SPEK
TUINMACHINES ★ STOLWIJK

Copyright EMAK S.P.A.

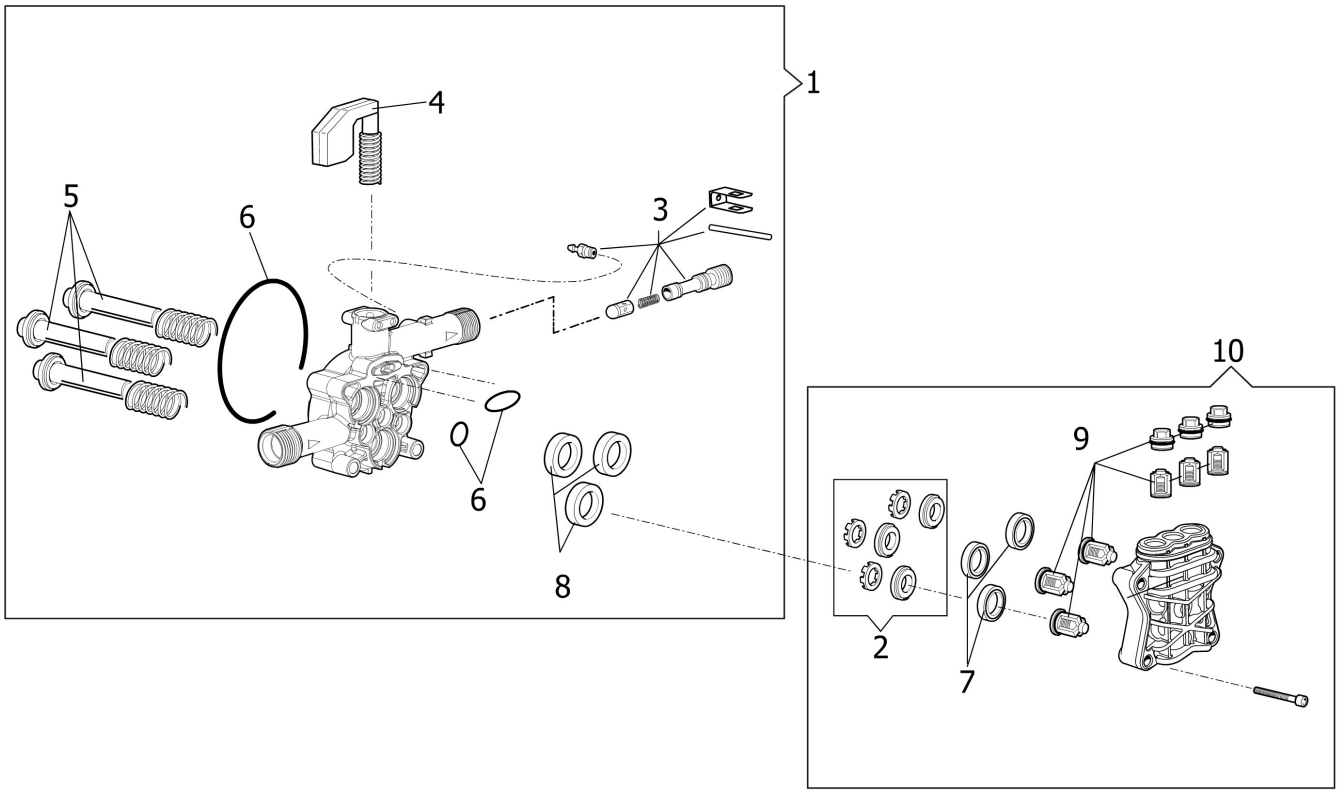

KEES VAN DER SPEK
TUINMACHINES ★ STOLWIJK

Copyright EMAK S.P.A.

Ref.Nu	Qty	Part number	Description	Validity from	Validity till	Notes	Bulletin
1	1	CH50270066	Complete piston supports kit				
2	1	CH50270067	Spacer washer			Acqua; Water	
3	1	CH50270058	Reed valve + injector kit				
4	1	CH31030050	Total stop kit				
5	1	CH50270055	Pistons assy				
6	1	CH50270054	Gasket set				
7	1	CH50190298	Gasket set				
8	1	CH50270059	Seal ring				
9	1	CH12200223	Suction/delivery valve kit				
10	1	CH50270069	Compl. top cover				

KEES VAN DER SPEK
TUINMACHINES ★ STOLWIJK

Copyright EMAK S.P.A.

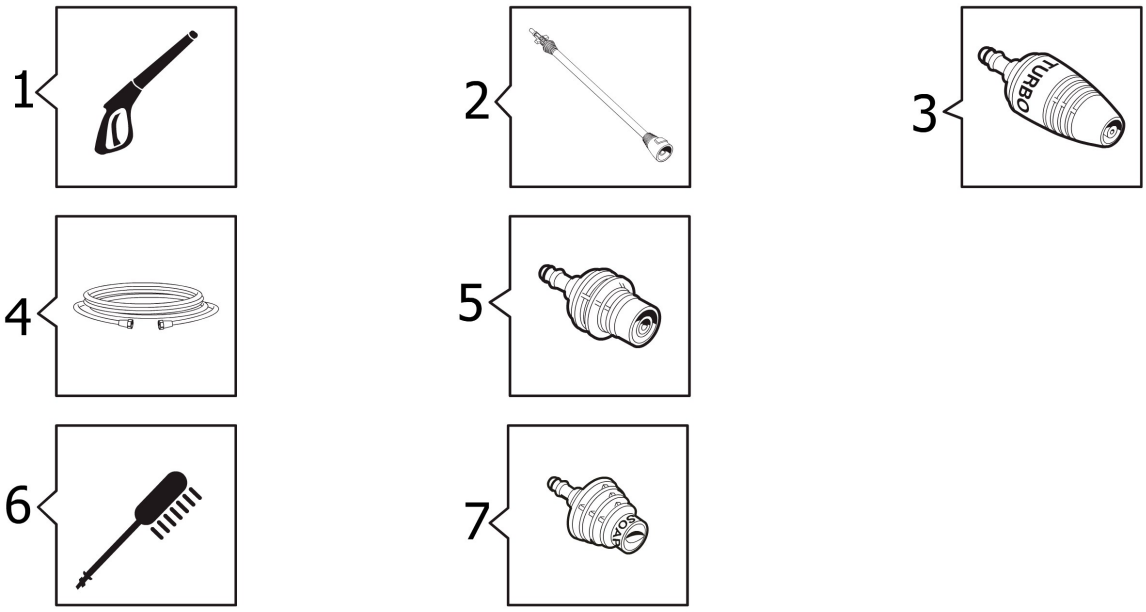

KEES VAN DER SPEK
TUINMACHINES ★ STOLWIJK

Copyright EMAK S.P.A.

Ref.Nu	Qty	Part number	Description	Validity from	Validity till	Notes	Bulletin
1	1	68500059	Spray gun				
2	1	68500061	Lance hose kit				
3	1	68500062	Nozzle head				
4	1	68500060	H.p. hose				
5	1	68500068	Adjustable jet head				
6	1	68500064	Fix brush				
7	1	68500063	Nozzle head				

KEES VAN DER SPEK
TUINMACHINES ★ STOLWIJK

Copyright EMAK S.P.A.