IP 3000 HS High-pressure washer

Documenten

Deck

Motorpump

Wiring schematic

Boiler

Hose reel

Accessories

KEES VAN DER SPEK
TUINMACHINES ★ STOLWIJK

Copyright EMAK S.P.A.

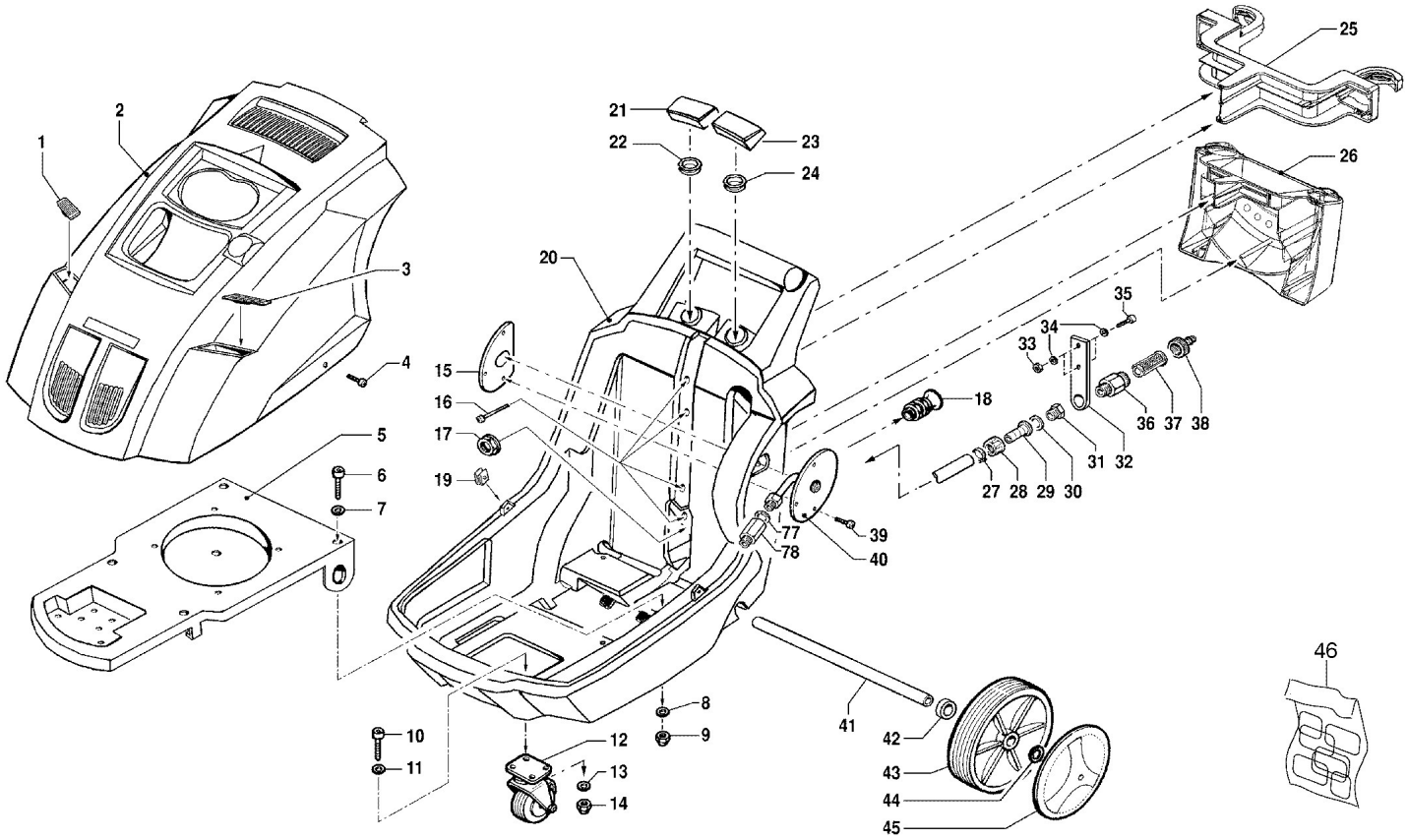

KEES VAN DER SPEK
TUINMACHINES ★ STOLWIJK

Copyright EMAK S.P.A.

Ref.Nu	Qty	Part number	Description	Validity from	Validity till	Notes	Bulletin
1	1	CH04020283	Right grid cover				
2	1	CH04770273	Cover kit				
3	1	CH04020282	Left grid cover				
4	2	CH36230031	Screw				
5	1	CH32060282	Central frame				
6	6	CH36090058	Screw				
7	6	CH28110016	Washer				
8	6	CH28110016	Washer				
9	6	CH06040039	Nut				
10	3	CH36090058	Screw				
11	3	CH28110016	Washer				
12	1	CH28100067A	Wheel				
13	3	CH28110016	Washer				
14	3	CH06040039	Nut				
15	1	CH30020587	Internal hose reel support				
16	4	CH36050103	Special screw				
17	1	CH12270003	Ring nut for cable holder				
18	1	CH24340022	Cable holder				
19	2	CH24030084	Plate				
20	1	CH32060283B	Tank / frame				
21	1	CH32000091	Diesel plug				
22	1	CH24340051	Gasket				
23	1	CH32000090	Detergent plug				
24	1	CH24340050	Gasket				
25	1	CH30020581	Upper accessories support				
26	1	CH30020580	Lower accessories support				
27	1	CH10030069	Band				
28	1	CH12230052	Wing nut				
29	1	CH28000098	Straight hose tail				
30	1	CH12090111	Gasket				
31	1	CH28250051	M/f reduction				
32	1	CH24040170	Suction plate				
33	2	CH06040039	Nut				
34	4	CH28110016	Washer				
35	2	CH36090058	Screw				
36	1	CH20000127	Fitting				
37	1	CH10020132A	Water filter				
38	1	CH28030325	Fittings				
39	3	CH36210013	Special screw				
40	1	CH30020586	External hose reel support				
41	1	CH00170013	Wheel axle				
42	2	CH28120070	Washer				
43	2	CH28100035	Wheel				

KEES VAN DER SPEK
TUINMACHINES ★ STOLWIJK

Copyright EMAK S.P.A.

Ref.Nu	Qty	Part number	Description	Validity from	Validity till	Notes	Bulletin
44	2	CH00090179	Ring				
45	2	CH04020332	Wheel cover				
46	1	CH32157787	Labels kit				
77	1	CH12090091	Gasket				
78	1	CH24170054	Fitting				

KEES VAN DER SPEK
TUINMACHINES ★ STOLWIJK

Copyright EMAK S.P.A.

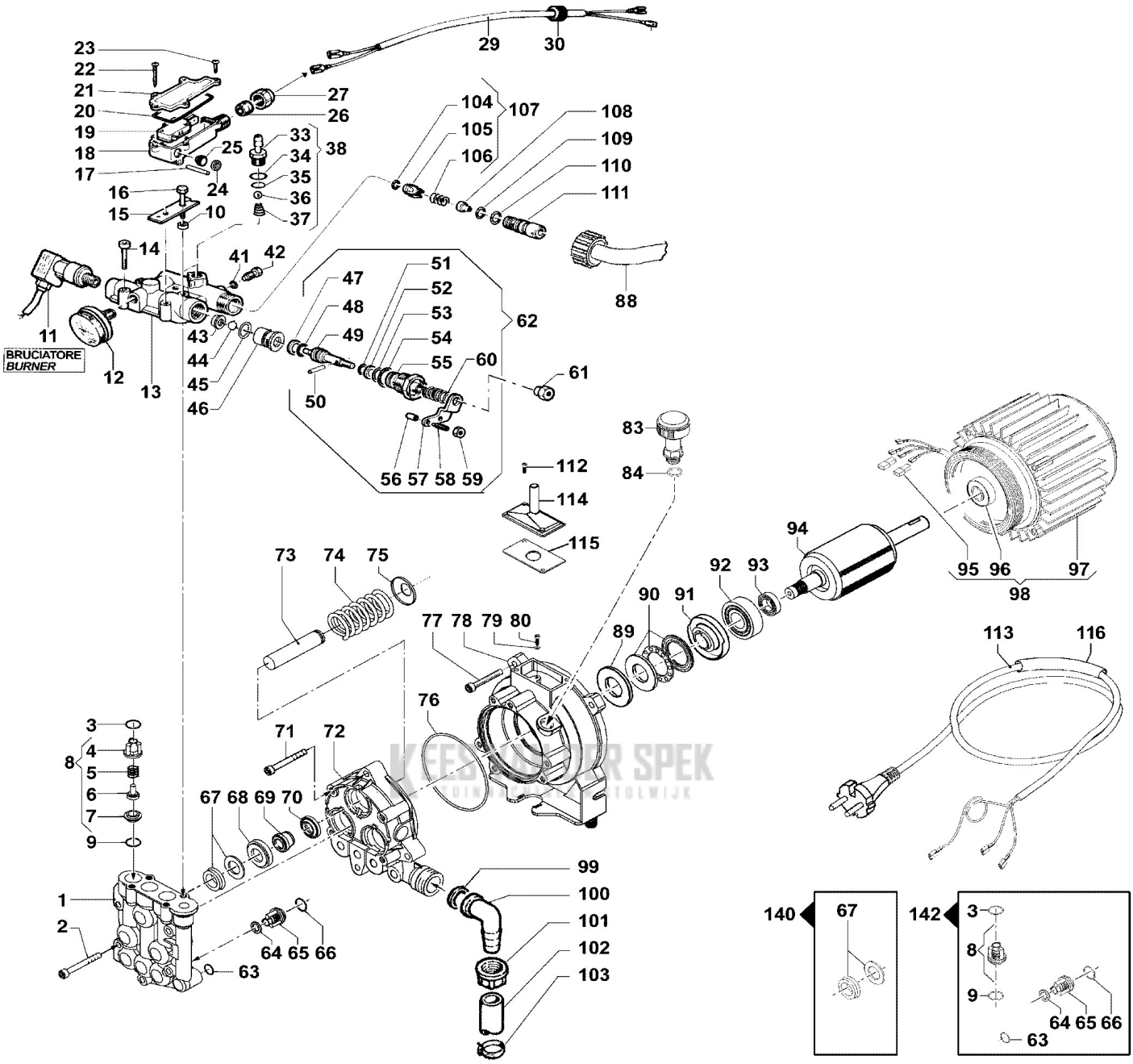

Copyright EMAK S.P.A.

Ref.Nu	Qty	Part number	Description	Validity from	Validity till	Notes	Bulletin
1	1	CH32180114	Top cover				
2	5	CH36090150	Screw				
3	4	CH12100392	O-ring				
4	3	CH12050031	Thrust bearing				
5	3	CH18020175	Spring				
6	3	CH36040026	Valve				
7	3	CH30090121	Seat				
8	3	CH12200039	Valve				
9	3	CH12100415	O-ring				
10	2	CH06010274	Spacer				
11	1	CH24210037	Pressure switch (red)				
12	1	CH18160125	Pressure gauge				
13	1	CH04240418	Body				
14	2	CH36090148	Screw				
15	1	CH24030081	Plate				
16	2	CH36070103	Hexagonal screw				
17	1	CH30050023	Plug				
18	1	CH30010133	Half case				
19	1	CH18250020	Switch				
20	1	CH12010136	O-ring				
21	1	CH04020200	Cover				
22	2	CH36250047	Screw				
23	3	CH36250048	Screw				
24	1	CH00090229	Ring				
25	1	CH24160112	Guard				
26	1	CH12010137	Gasket				
27	1	CH12000056	Wing nut				
29	1	CH04560308	Wire				
30	1	CH24340040	Cable holder				
33	1	CH28030383	Fittings				
34	1	CH12100014	O-ring				
35	1	CH12100039	O-ring				
36	1	CH30030016	Ball				
37	1	CH18020254	Spring				
38	1	CH28030514	Detergent coupling suction kit				
41	1	CH36050087	Special screw				
42	1	CH12100220	O-ring				
43	1	CH30090153	Easy-start seat				
44	1	CH30030028	Ball				
45	1	CH12100152	O-ring				
46	1	CH30090148	Seat				
47	1	CH00090112	Ring				
48	1	CH12100041	O-ring				
49	1	CH00150190	Easy start kit				
50	1	CH30210035	Plug				

KEES VAN DER SPEK
TUINMACHINES ★ STOLWIJK

Copyright EMAK S.P.A.

Ref.Nu	Qty	Part number	Description	Validity from	Validity till	Notes	Bulletin
51	1	CH12100055	O-ring				
52	1	CH00090110	Ring				
53	1	CH12100049	O-ring				
54	1	CH12100390	O-ring				
55	1	CH36050115	Screw				
56	1	CH04320044	Cap				
57	1	CH16000072	Total stop lever				
58	1	CH36220047	Total stop adjustable nut				
59	1	CH06040087	Nut				
60	1	CH18020249	Spring				
61	1	CH32020241	Screw				
62	1	CH12150348	Regulation valve				
63	1	CH12100433	O-ring				
64	3	CH06010261	Spacer				
65	3	CH12200039	Valve				
66	3	CH12100432	O-ring				
67	3	CH12410041	Gasket				
68	3	CH00090201	Ring				
69	3	CH06010310	Spacer				
70	3	CH00190123	Seal ring				
71	3	CH36090100	Screw				
72	1	CH24320014B	Pump crankcase				
73	3	CH24090108	Piston				
74	3	CH18020174	Spring				
75	3	CH00090195	Ring				
76	1	CH12100431	O-ring				
77	4	CH36090114	Screw				
78	1	CH10090211	Motor flange kit				
79	1	CH28070013	Washer				
80	1	CH36250072	Screw				
83	1	CH32000087	Cap				
84	1	CH12100093	O-ring				
88	1	CH32081000	Pump - coil hose				
89	1	CH28160088	Spacer				
90	1	CH04360029	Bearing				
91	1	CH00010512	Eccentric shaft				
92	1	CH04380069	Bearing				
93	1	CH00190113	Seal ring				
94	1	301100003	Stator and rotor kit				
95	2	CH04220057	Band				
96	1	CH04380083	Bearing				
97	1	CH50270039	Stator and kit				
98	1	CH50270039	Stator and kit				
99	1	CH12090111	Gasket				
100	1	CH28010074	Elbow coupling				

KEES VAN DER SPEK
TUINMACHINES ★ STOLWIJK

Copyright EMAK S.P.A.

Ref.Nu	Qty	Part number	Description	Validity from	Validity till	Notes	Bulletin
101	1	CH12230052	Wing nut				
102	1	CH32081006	Water suction hose				
103	1	CH10030069	Band				
104	1	CH12100220	O-ring				
105	1	CH36000087	Valve				
106	1	CH18020177	Spring				
107	1	CH50270025	Reed valve kit				
108	1	CH34000287	Nozzle				
109	1	CH12100041	O-ring				
110	1	CH12100152	O-ring				
111	1	CH20000087	Nipple				
112	2	CH36250046	Screw				
113	1	CH04560183	Wire				
114	1	CH04020281	Cover				
115	1	CH12010153	Gasket				
116	1	CH12290025	Sheath				
140	1	CH50190033	Piston seal kit				
142	1	CH50250019	Suction/delivery valve kit				

KEES VAN DER SPEK
TUINMACHINES ★ STOLWIJK

Copyright EMAK S.P.A.

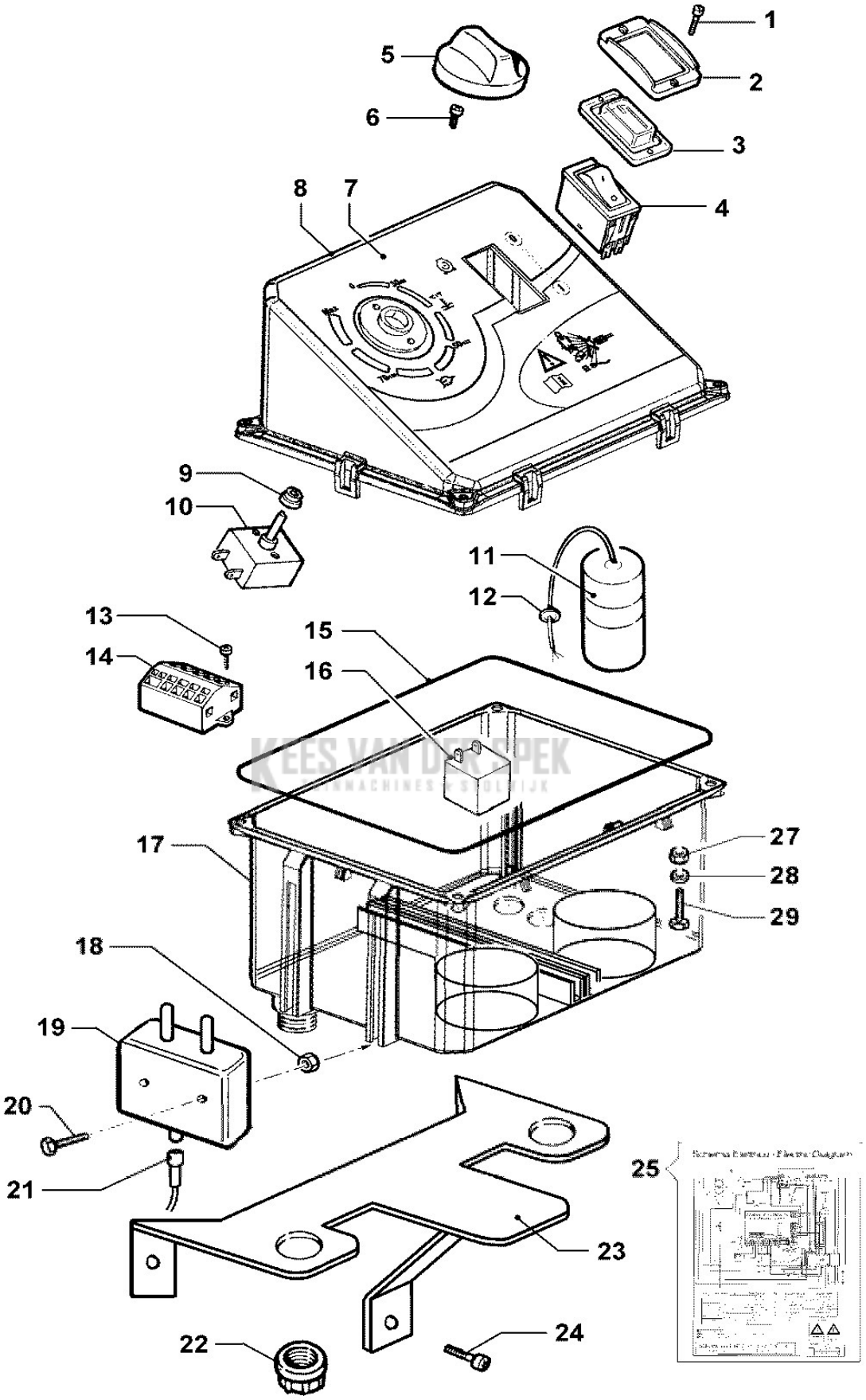

Copyright EMAK S.P.A.

Ref.Nu	Qty	Part number	Description	Validity from	Validity till	Notes	Bulletin
1	2	CH36250003	Screw				
2	1	CH04600030	Switch cover				
3	1	CH24160095	Switch protection				
4	1	CH14100061	Switch				
5	1	301100001	Thermostat				
6	2	CH36230007	Screw				
7	1	CH04570042	Label				
8	1	CH04020280	Cover				
9	1	CH02040041	Thermostat bushing				
10	1	301100001	Thermostat				
11	1	CH04340329A	Condenser				
12	2	CH24340040	Cable holder				
13	2	CH36250074	Screw				
14	1	CH18050044	Clamp				
14	3	CH18050045	Clamp				
14	1	CH18050047	Clamp				
15	1	CH12100555	O-ring				
16	1	CH30430037	Burner delayer				
17	1	CH30010523	Electrical box				
18	2	CH06040061	Nut				
19	1	CH32260088A	H.t. transformer				
20	2	CH36090199	Screw				
21	1	CH04560305	H.t. transformer cable				
22	2	CH12230052	Wing nut				
23	1	CH30020590	Support				
24	3	CH28150015	Rivet				
25	1	CH16100952	Electric diagram (drawing)				
27	3	CH06040061	Nut				
28	1	CH28110037	Washer				
29	1	CH36070234	Screw				

KEES VAN DER SPEK
TUINMACHINES ★ STOLWIJK

Copyright EMAK S.P.A.

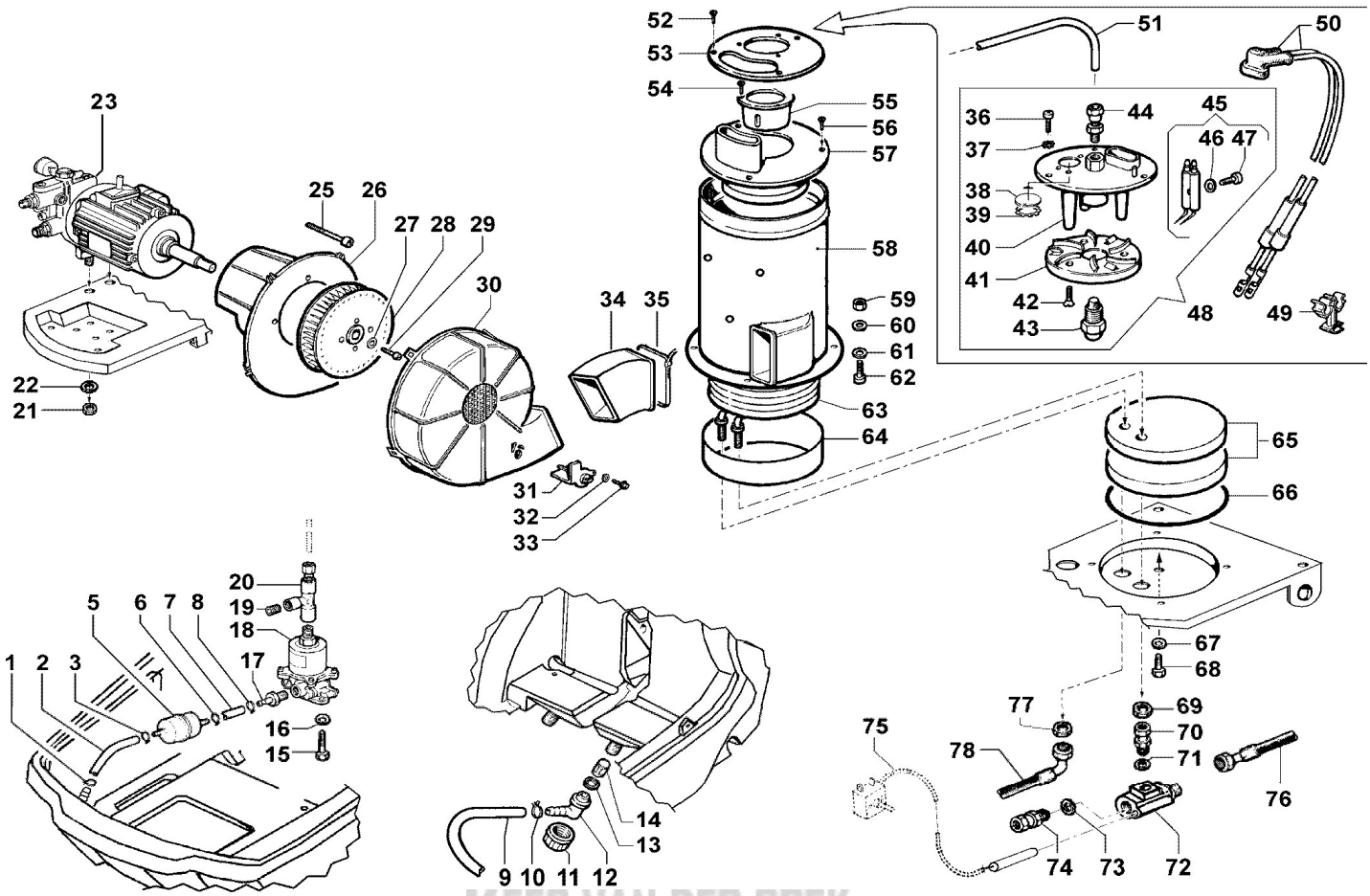

KEES VAN DER SPEK
TUINMACHINES ★ STOLWIJK

Copyright EMAK S.P.A.

Ref.Nu	Qty	Part number	Description	Validity from	Validity till	Notes	Bulletin
1	1	CH10030003	Band				
2	1	CH32080997	Diesel hose				
3	1	CH10030003	Band				
5	1	CH10020120	Diesel filter				
6	1	CH10030003	Band				
7	1	CH32081044	Diesel hose				
8	1	CH10030003	Band				
9	1	CH32080705	Detergent hose				
10	2	CH10030059	Band				
11	1	CH12230052	Wing nut				
12	1	CH28030371	Fitting				
13	1	CH12090104	Gasket				
14	1	CH10020078	Detergent suction filter				
15	2	CH36070106	Hexagonal screw				
16	2	CH28070011	Washer				
17	1	CH28030408A	Coupling				
18	1	CH24220010	Diesel pump				
19	1	CH32000017	Cap				
20	1	CH28030486	Coupling				
21	2	CH06040079	Nut				
22	2	CH28110016	Washer				
23	1	CH73010930	Motorpump				
25	4	CH36250070	Screw				
26	1	CH04660031	Shraud cover				
27	1	CH28070011	Washer				
28	1	CH36320089	Fan				
29	1	CH36090034	Screw				
30	1	CH04040033	Shraud cover				
31	1	CH04660026	Shutter				
32	1	CH28110006	Washer				
33	1	CH36250049	Screw				
34	1	CH18100024	Sleeve				
35	2	CH10030076	Band				
36	3	CH36250038	Screw				
37	3	CH28070013	Washer				
38	1	CH32000074	Cap				
39	1	CH30190035	Snap ring				
40	1	CH06020047	Electrode holder disc				
41	1	CH06020057	Air turbolence ring				
42	3	CH36080004	Screw				
43	1	CH34000534	Nozzle (diesel)				
44	1	CH28030322	Fitting				
45	1	CH08050023	Bifilar electrode kit				
46	1	CH28110080	Washer				
47	1	CH36230031	Screw				
48	1	CH03350031	Burner kit				

KEES VAN DER SPEK
TUINMACHINES ★ STOLWIJK

Copyright EMAK S.P.A.

Ref.Nu	Qty	Part number	Description	Validity from	Validity till	Notes	Bulletin
49	2	CH12020052	Hook				
50	1	CH05350073	H.t. cable kit				
51	1	CH32080998	Copper diesel hose				
52	3	CH36250028	Screw				
53	1	CH04020287	Upper cover				
54	3	CH36250037	Screw				
55	1	CH02180012	Tube				
56	3	CH36250028	Screw				
57	1	CH04020286	Lower cover				
58	1	CH04240405	Boiler body				
59	4	CH06040095	Nut				
60	4	CH28110030	Washer				
61	4	CH28110030	Washer				
62	4	CH36090112	Screw				
63	1	CH30440020	Pipe coil				
64	1	CH00090295	Bottom body				
65	1	CH28220015	Refractory pad				
66	1	CH12100554	O-ring				
67	1	CH28110030	Washer				
68	1	CH36070106	Hexagonal screw				
69	1	CH12270015	Coil-lock nut				
70	1	CH00110006	Adapter				
71	1	CH12090113	Gasket				
72	1	CH04240377A	Thermostat body				
73	1	CH12090097	Gasket				
74	1	CH12150649	Safety valve				
75	1	301100001	Thermostat				
76	1	CH32081004	Coil - hose reel hose				
77	1	CH12270015	Coil-lock nut				
78	1	CH32081000	Pump - coil hose				

KEES VAN DER SPEK
TUINMACHINES ★ STOLWIJK

Copyright EMAK S.P.A.

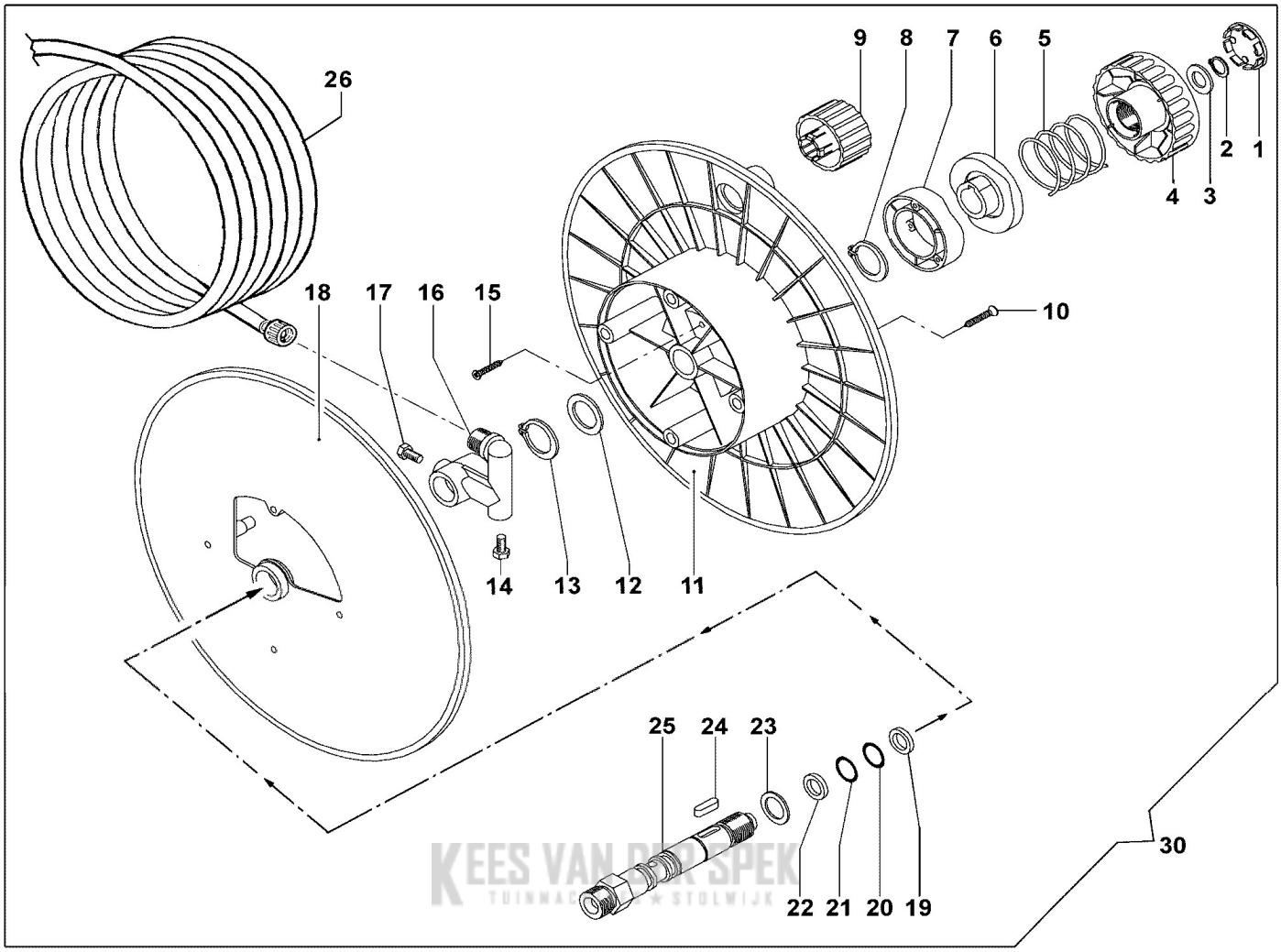

KEES VAN DER SPEK
TUINMACHINES STOLWIJK

Copyright EMAK S.P.A.

Ref.Nu	Qty	Part number	Description	Validity from	Validity till	Notes	Bulletin
1	1	CH32020270	Cap				
2	1	CH30190043	Snap ring				
3	1	CH28110015	Washer				
4	1	CH36060014	Clamp				
5	1	CH18020211	Spring				
6	1	CH04680002	Cam				
7	1	CH04680001	Cam				
8	1	CH30190037	Snap ring				
9	1	CH24310007	Knob				
10	4	CH36230015	Screw				
11	1	CH06020052	Disk				
12	1	CH28120080	Washer				
13	1	CH30190037	Snap ring				
14	1	CH32020018	Cap				
15	3	CH36230019	Screw				
16	1	CH28030480	Fittings				
17	1	CH32020018	Cap				
18	1	CH06020051	Disk				
19	1	CH00090165	Ring				
20	1	CH12100232	O-ring				
21	1	CH12100232	O-ring				
22	1	CH00090165	Ring				
23	1	CH28120080	Washer				
24	1	CH16020059	Key				
25	1	CH24080151	Fittings				
26	1	68500026	H.p. hose kit				
30	1	CH70020255	Complete hose reel with h.p.hose				

KEES VAN DER SPEK
TUINMACHINES ★ STOLWIJK

Copyright EMAK S.P.A.

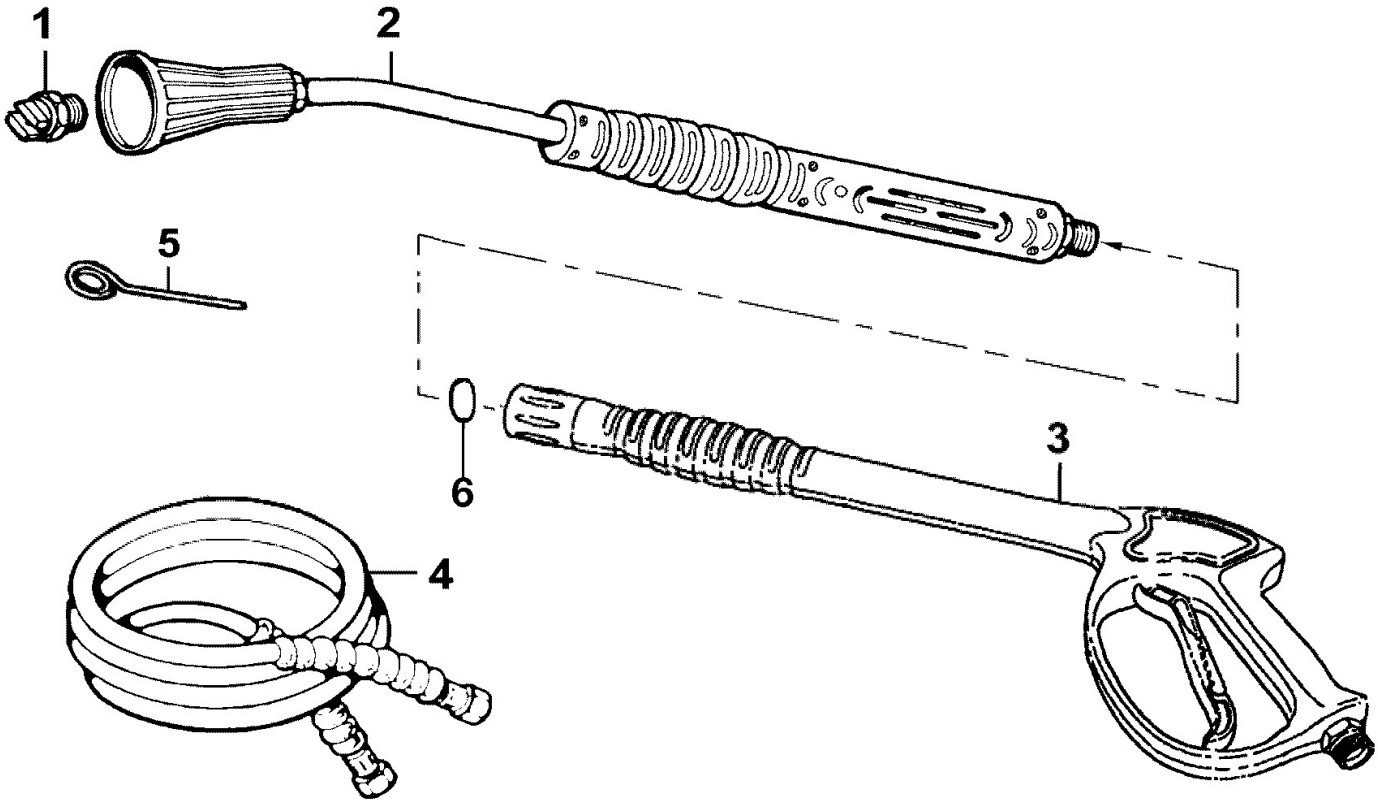

KEES VAN DER SPEK
TUINMACHINES ★ STOLWIJK

Copyright EMAK S.P.A.

Ref.Nu	Qty	Part number	Description	Validity from	Validity till	Notes	Bulletin
1	1	CH34000709	Water nozzle				
2	1	68500039	Lance with adjustable nozzle				
3	1	68500031	Spray gun				
4	1	68500026	H.p. hose kit				
5	1	CH04550013	Needle				
6	1	CH12100084	O-ring				

KEES VAN DER SPEK
TUINMACHINES ★ STOLWIJK

Copyright EMAK S.P.A.