IP 1900 S High-pressure washer

Documenten

Deck

Engine

Accessories

KEES VAN DER SPEK
TUINMACHINES ★ STOLWIJK

Copyright EMAK S.P.A.

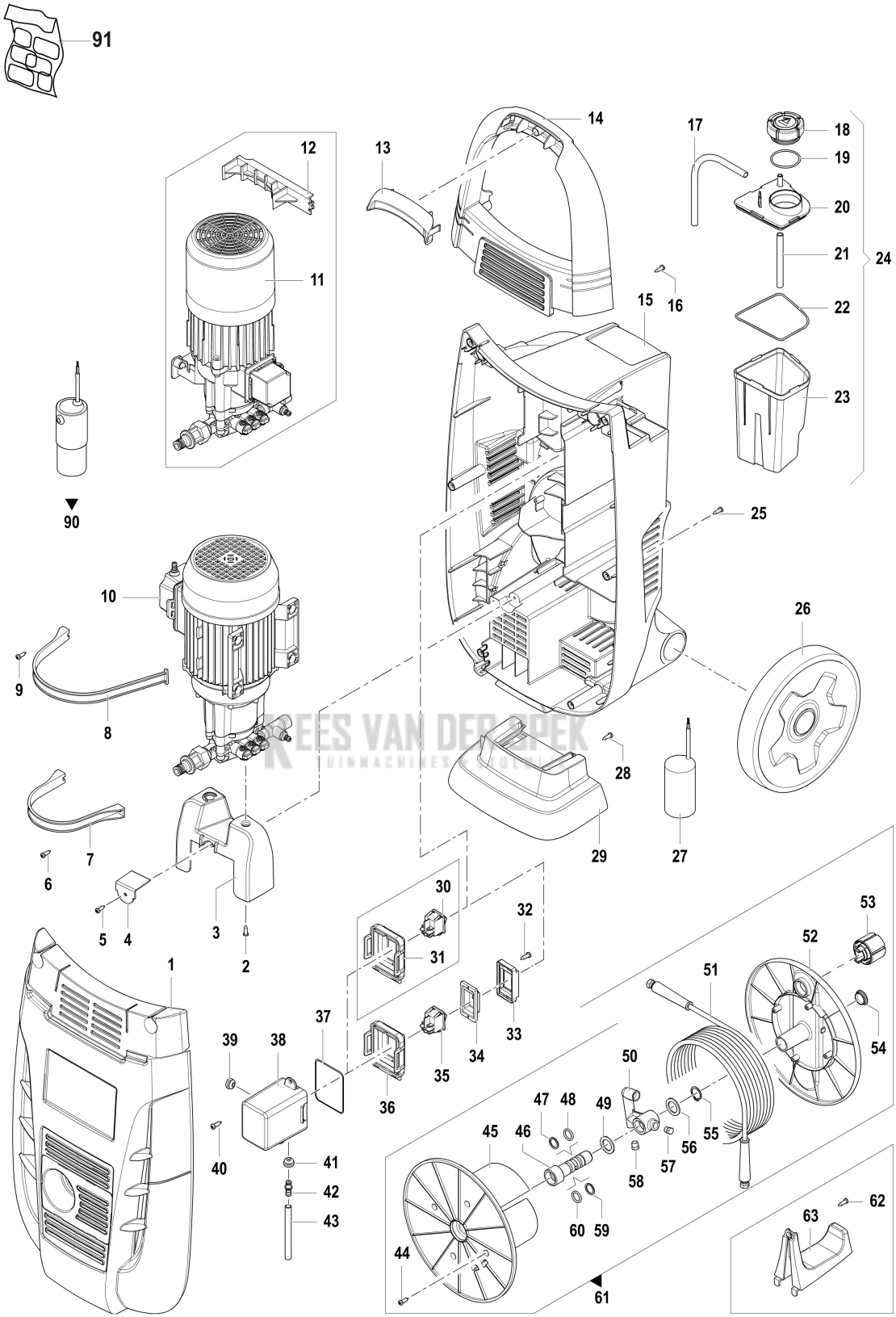

Copyright EMAK S.P.A.

Ref.Nu	Qty	Part number	Description	Validity from	Validity till	Notes	Bulletin
1	1	CH04770414	Cover kit			Frontale, arancio; Front, orange	
2	1	CH36250071	Screw				
3	1	CH24000139	Support				
4	1	CH30020733	Bracket				
5	1	CH36050114	Screw				
6	2	CH36050114	Screw	05/2009			
7	1	CH30400005	Band	05/2009			
8	1	CH30400004	Band				
9	1	CH36050114	Screw				
10	1	CH73040433	Motorpump				
11		-	Not available for this product				
12		-	Not available for this product				
13	1	CH04020372	Handle cover				
14	1	CH14110044A	Handle				
15	1	CH32060312A	Frame				
16	2	CH36050114	Screw				
17	1	CH32081107	Tube				
18	1	CH32000134	Detergent plug				
19	1	CH12100200	O-ring				
20	1	CH04020375	Cover				
21	1	CH32081102	Tube				
22	1	CH12100379	O-ring				
23	1	CH30290026	Detergent tank				
24	1	CH05310291	Detergent tank kit				
25	6	CH36050114	Screw				
26	2	CH28100091B	Wheel				
27	1	CH04340329A	Condenser				
28	2	CH36050114	Screw				
29	1	CH30020697A	Frame			Inferiore; Lower	
30		-	Not available for this product				
31		-	Not available for this product				
32	2	CH36250003	Screw				
33	1	CH04600030	Switch cover				
34	1	CH24160095	Switch protection				
35	1	CH14100061	Switch				
36	1	CH04020373	Cover				
37	1	CH12010203	Gasket				
38	1	CH30010543	Switch box				
39	2	CH24340046	Cable holder				
40	1	CH36050114	Screw				
41	2	CH24340048	Cable holder				
42	2	CH28030267	Fitting				
43	1	CH32081123	Tube				
44	4	CH36050114	Screw				

KEES VAN DER SPEK
TUINMACHINES ★ STOLWIJK

Copyright EMAK S.P.A.

Ref.Nu	Qty	Part number	Description	Validity from	Validity till	Notes	Bulletin
45	1	CH06020066	Disk				
46	1	CH28033415	Fitting				
47	1	CH12100232	O-ring				
48	1	CH00090165	Ring				
49	1	CH28120080	Washer				
50	1	CH28030480	Fittings				
51	1	68500024	H.p. hose kit				
52	1	CH06020067A	Disk				
53	1	CH24310008A	Knob				
54	1	CH32020342A	Cap				
55	1	CH30190042	Snap ring				
56	1	CH28120080	Washer				
57	1	CH32020018	Cap				
58	1	CH32020018	Cap				
59	1	CH12100232	O-ring				
60	1	CH00090165	Ring				
61	1	CH70020292	Hose reel kit				
62		-	Not available for this product				
63		-	Not available for this product				
90	1	CH04340062	Circuit breaker			Optional	
91	1	CH32155321	Labels kit				

KEES VAN DER SPEK
TUINMACHINES ★ STOLWIJK

Copyright EMAK S.P.A.

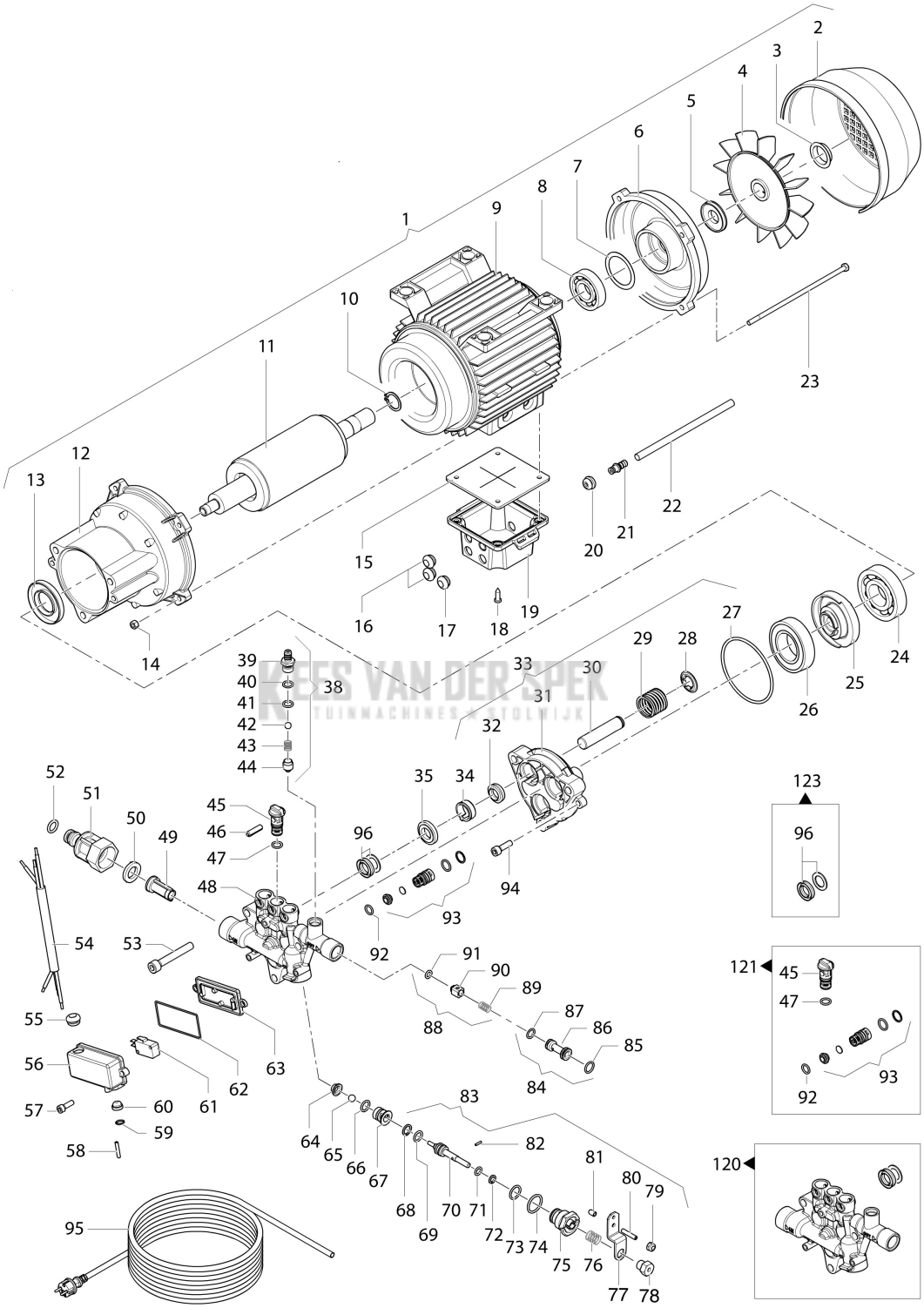

Copyright EMAK S.P.A.

Ref.Nu	Qty	Part number	Description	Validity from	Validity till	Notes	Bulletin
1	1	CH18310655	Complete motor				
2	1	CH04020400	Fan cover				
3	1	CH00090280	Ring				
4	1	CH36320109	Fan				
5	1	CH12410110	Ring				
6	1	CH10090271	Flange (motor)				
7	1	CH00090327	Ring				
8	1	CH04380083	Bearing				
9		-	Not available for this product				
10	1	CH30190011	Snap ring				
11		-	Not available for this product				
12	1	CH10090268	Flange (motor)				
13	1	CH00190007	Seal ring				
14	4	CH06040046	Nut				
15	1	CH12010201	Gasket				
16	2	CH24340046	Cable holder				
17	1	CH24340048	Cable holder				
18	3	CH36250019	Screw				
19	1	CH04020374	Electrical box				
20	1	CH24340048	Cable holder				
21	2	CH28030267	Fitting				
22	1	CH32081123	Tube				
23	4	CH36070256	Screw				
24	1	CH04380071	Bearing				
25	1	CH00010629	Eccentric shaft				
26	1	CH04360032	Bearing				
27	1	CH12100620	O-ring				
28	3	CH00090267	Ring				
29	3	CH18020213	Spring				
30	3	CH24090125B	Piston				
31	1	CH24320029	Pump crankcase				
32	3	CH00190058	Seal ring				
33	1	CH24320032	Pump crankcase				
34	3	CH06010308	Spacer				
35	3	CH00090270	Ring				
38	1	CH50260345	Fitting				
39	1	CH28000104	Detergent coupling suction kit				
40	1	CH12100465	O-ring				
41	1	CH12100466	O-ring				
42	1	CH30030033	Ball				
43	1	CH18020214	Spring				
44	1	CH02040051	Bushing				
45	3	CH12200069	Valve				
46	3	CH30210032	Plug				

KEES VAN DER SPEK
TUINMACHINES ★ STOLWIJK

Copyright EMAK S.P.A.

Ref.Nu	Qty	Part number	Description	Validity from	Validity till	Notes	Bulletin
47	3	CH12100465	O-ring				
48	1	CH32180412	Top cover				
49	1	CH10020132A	Water filter				
50	1	CH12090111	Gasket				
51	1	CH28030524	Fitting				
52	1	CH12100638	O-ring				
53	3	CH36090191	Screw				
54	1	CH04560374A	Cable total stop				
55	1	CH24340046	Cable holder				
56	1	CH04020276	Cover				
57	2	CH36090075	Screw				
57	1	CH12100465	O-ring				
58	1	CH30050097	Plug				
59	1	CH00090229	Ring				
60	1	CH24160112	Guard				
61	1	CH18250020	Switch				
62	1	CH12100550	O-ring				
63	1	CH04020290	Half case				
64	1	CH30090141	Seat				
65	1	CH30030035	Ball				
66	1	CH12100152	O-ring				
67	1	CH30090158	Seat				
68	1	CH00090112	Ring				
69	1	CH12100041	O-ring				
70	1	CH00150194	Easy start kit				
71	1	CH12100055	O-ring				
72	1	CH00090110	Ring				
73	1	CH12100049	O-ring				
74	1	CH12100390	O-ring				
75	1	CH36050115	Screw				
76	1	CH18020249	Spring				
77	1	CH16000093	Lever				
78	1	CH32020241	Screw				
79	1	CH06040087	Nut				
80	1	CH36220047	Total stop adjustable nut				
81	1	CH04320044	Cap				
82	1	CH30210035	Plug				
83	1	CH12150363	Valve				
84	1	CH34100370	Injector kit				
85	1	CH12100170	O-ring				
86	1	CH34100361	Injector body				
87	1	CH12100465	O-ring				
88	1	CH50260262	Check valve kit				
89	1	CH18020218	Spring				
90	1	CH24090102	Check valve				

KEES VAN DER SPEK
TUINMACHINES ★ STOLWIJK

Copyright EMAK S.P.A.

Ref.Nu	Qty	Part number	Description	Validity from	Validity till	Notes	Bulletin
91	1	CH12100463	Gasket				
92	3	CH12100465	O-ring				
93	3	CH12200068	Valve				
94	2	CH36090032	Screw				
95	1	CH04560377A	Wire				
96	3	CH12410041	Gasket				
120	1	CH33000120	Compl. top cover				
121	1	CH50250026	Valve				
123	1	CH50190033	Piston seal kit				

KEES VAN DER SPEK
TUINMACHINES ★ STOLWIJK

Copyright EMAK S.P.A.

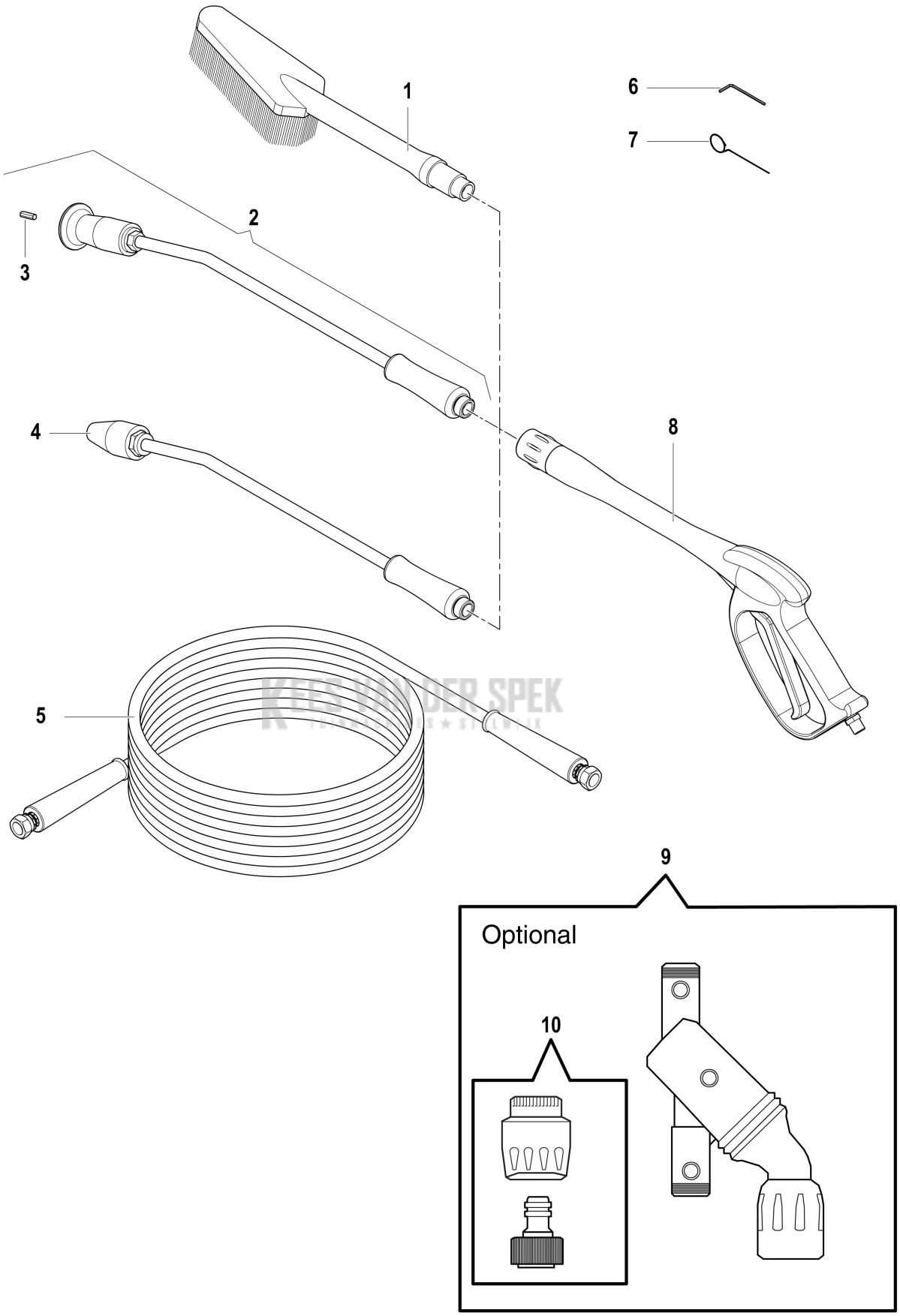

Copyright EMAK S.P.A.

Ref.Nu	Qty	Part number	Description	Validity from	Validity till	Notes	Bulletin
1	1	CH14130032	Fixed brush				
2	1	68500037	Lance with adjustable nozzle				
3	1	CH34000512	Water nozzle				
4	1	68500047	Lance rotojet			Ugello rotante; Rotating lance	
5	1	CH33011218	H.p. hose				
6	1	CH04540037	Bushing				
7	1	CH04550013	Needle				
8	1	68500029	Spray gun				
9	1	CH06080049	Backflow preventer			Optional	
10	1	CH50020024	claber support kit			Optional	

KEES VAN DER SPEK
TUINMACHINES ★ STOLWIJK

Copyright EMAK S.P.A.