Husqvarna
READY WHEN YOU ARE

HUSQVARNA - SPARE PARTS CATALOG

CHAIN SAWS: HUSQVARNA 130

KEES VAN DER SPEK
TUINMACHINES ★ STOLWIJK

Sparepartslist

SPAREPARTSLIST

CHAIN SAWS

HUSQVARNA 130

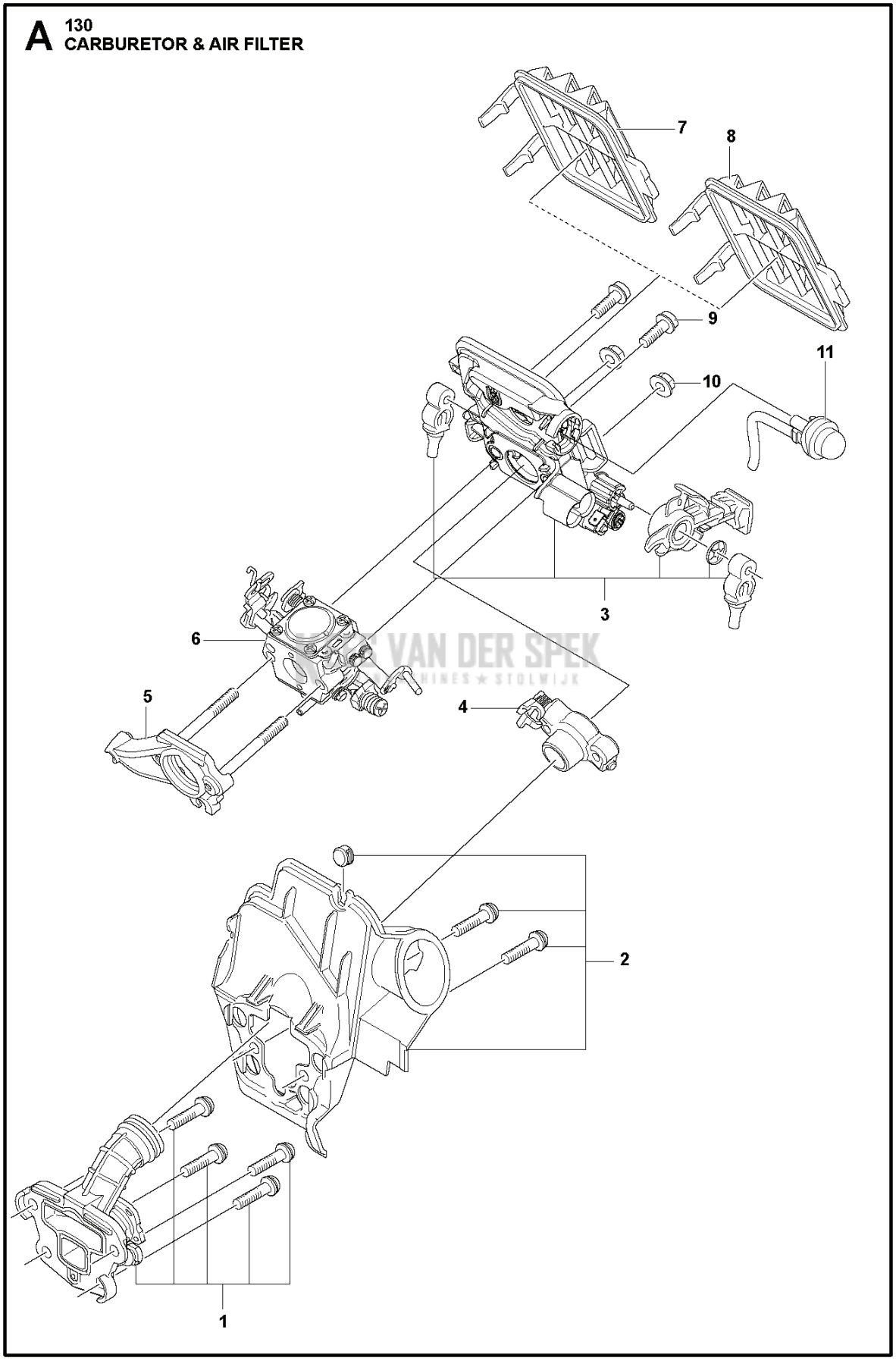
A 130
CARBURETOR & AIR FILTER
7
8
9
10
11
3
6
5
4
2
1

PXM_REF	PXM_ PARTNO	DESCRIPTION	PXM_REMARK	QTY
1	591463901	INLAAT	Intake Boot	1
2	591464401	SERVICE KIT	Insulation Wall	1
3	591464501	SERVICE KIT	Filter Holder	1
4	501749401	VENTIEL COMPL.		1
5	589289201	FLENS		1
6	588247901	CARBURATEUR		1
6	593818101	CARBURATEUR	RUSSIA & LATIN AMERICA ONLY	1
7	588229301	LUCHTFILTER	Mesh Filter	1
8	588229302	LUCHTFILTER	Non-Woven Filter	1
9	503217010	SCHROEF CCRPANT		2
10	530016101	MOER		2
11	503936601	PURGE		1

KEES VAN DER SPEK
TUINMACHINES ★ STOLWIJK

B 130
CHAIN BRAKE & CLUTCH COVER

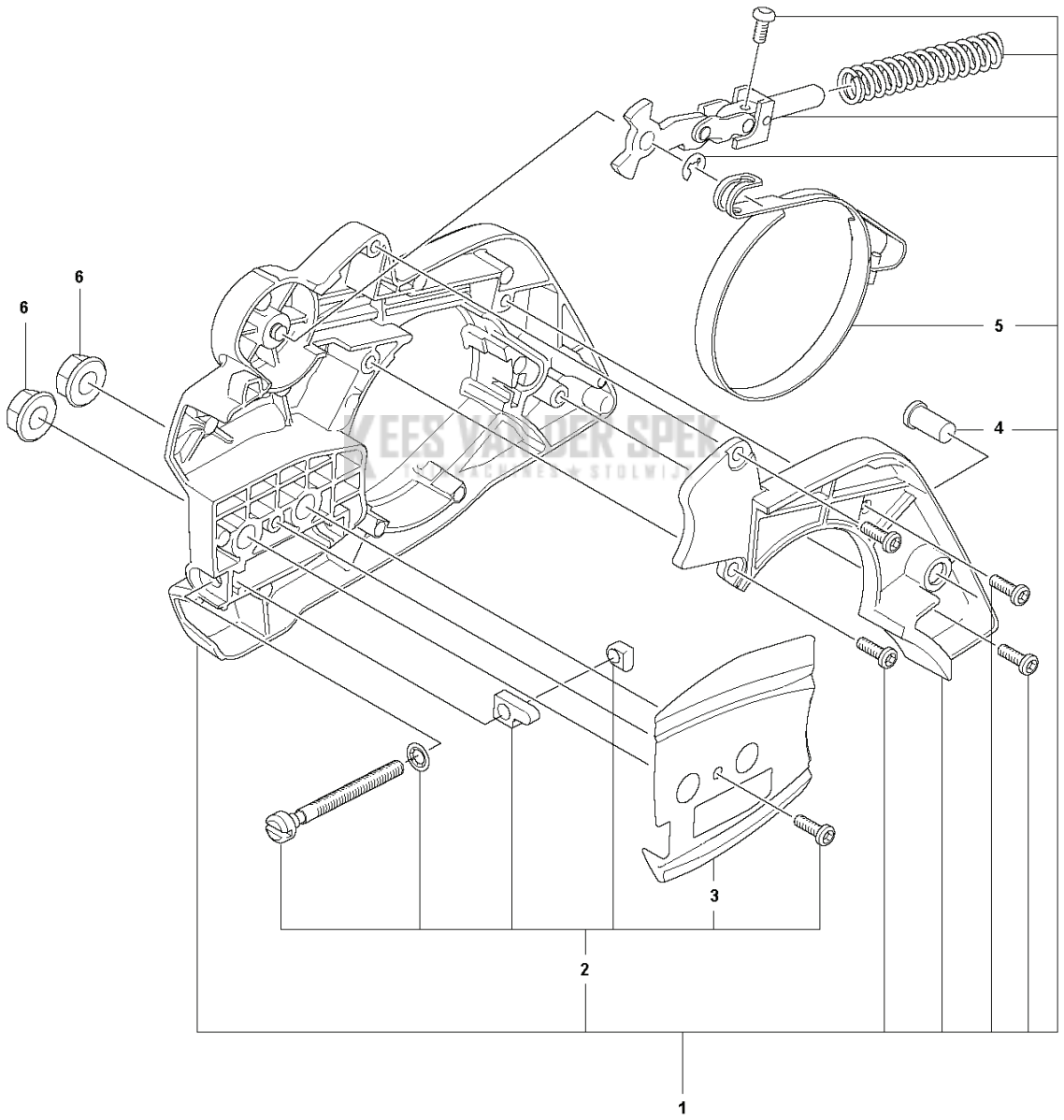

PXM_REF	PXM_ PARTNO	DESCRIPTION	PXM_REMARK	QTY	
1	591464701	SERVICE KIT	Clutch Cover	1	
2	591464601	SERVICE KIT	Bar Adjuster	1	1
3	582647601	GELEIDEPLAAT		1	1,2
4	590439601	GELEIDEHULS		1	
5	544306001	REMBAND COMPL.		1	1
6	530015917	MOER		2	

KEES VAN DER SPEK
TUINMACHINES ★ STOLWIJK

C 130
CLUTCH & OIL PUMP

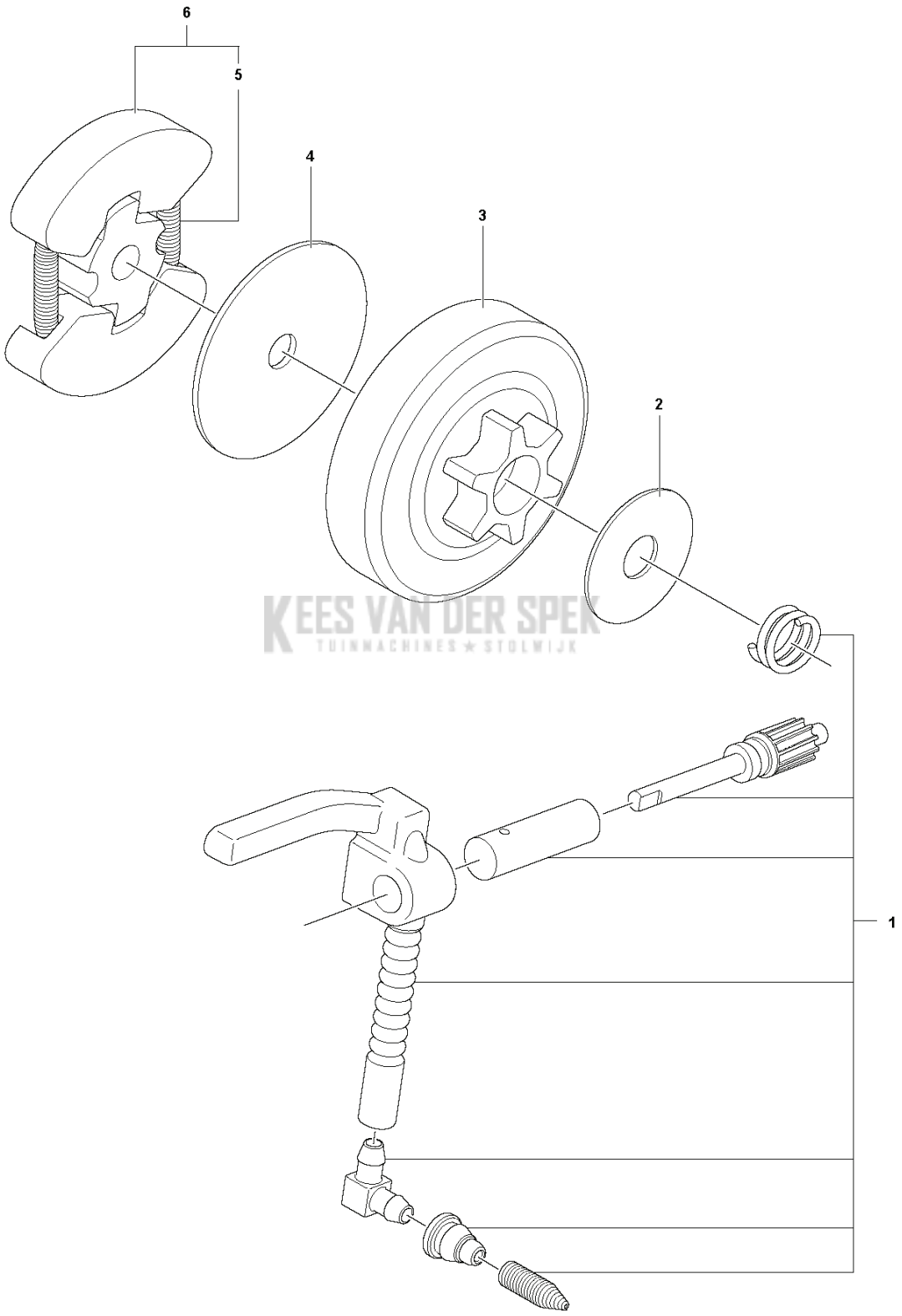

KEES VAN DER SPEK
TUINMACHINES ★ STOLWIJK

PXM_REF	PXM_ PARTNO	DESCRIPTION	PXM_REMARK	QTY	
1	591466801	SERVICE KIT	OIL PUMP	1	
2	579621501	RING		1	
3	582598401	KOPPELINGSTROMMEL COMPL.		1	
4	530015611	RING		1	
5	530094188	VEER		1	6
6	530014949	KOPPELING		1	

KEES VAN DER SPEK
TUINMACHINES ★ STOLWIJK

D 130 CRANKCASE

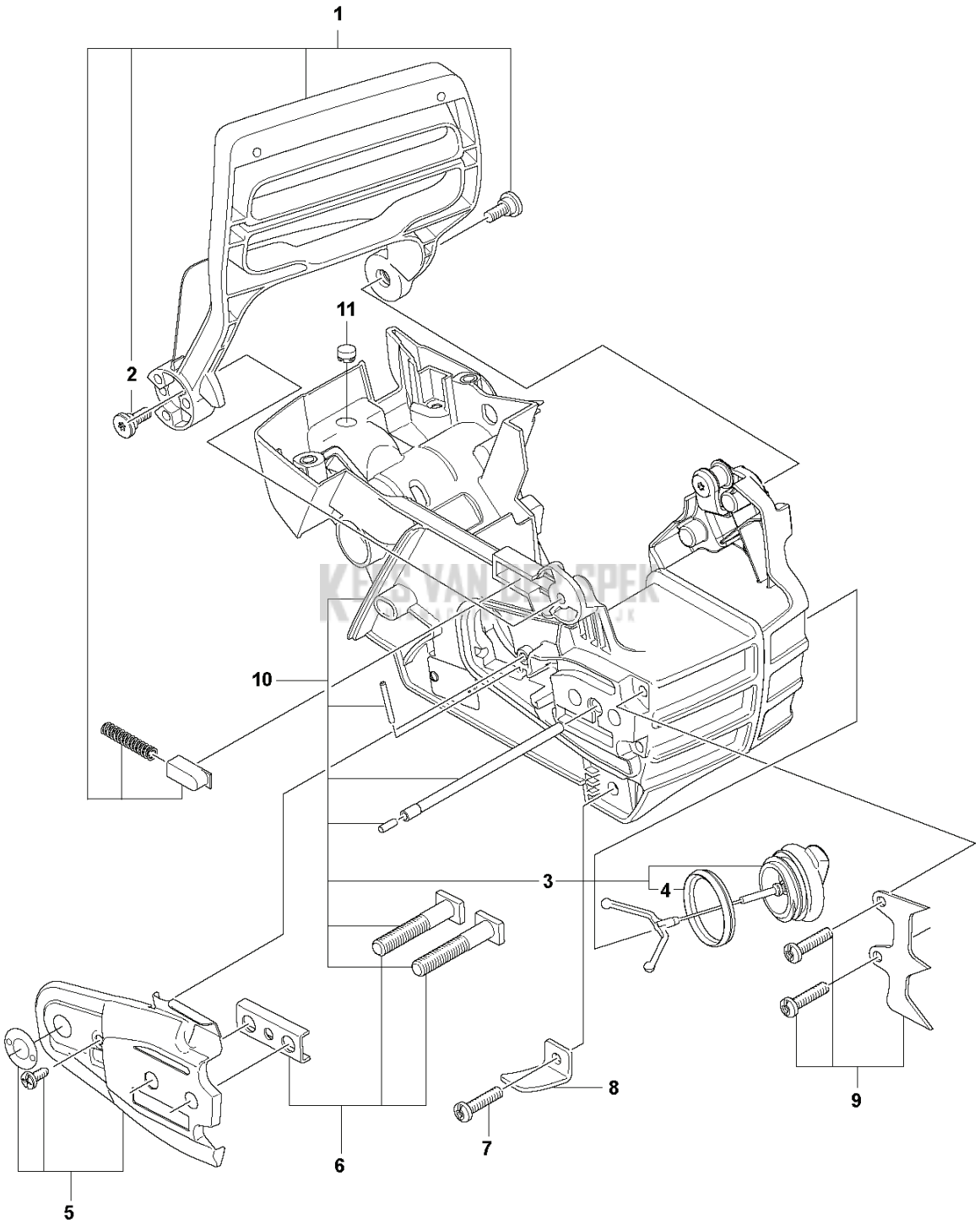

PXM_REF	PXM_ PARTNO	DESCRIPTION	PXM_REMARK	QTY	
1	591464801	SERVICE KIT	Hand Guard	1	
2	545127301	HOOFDDEEL	SCREW	2	
3	544111203	TANKDEKSEL COMPL.		1	10
4	589241101	PAKKING		1	3,10
5	591464901	SERVICE KIT	Bar Plate	1	
6	591465001	SERVICE KIT	Bar Bolt	1	
7	530016432	SCREW		1	
8	530029850	KETTINGVANGER		1	
9	530014381	FELLING DOG	Spike Assembly Kit	1	
10	591465301	SERVICE KIT	Chassis	1	
11	540057301	STEUN		1	

KEES VAN DER SPEK
TUINMACHINES ★ STOLWIJK

E 130 CRANKSHAFT

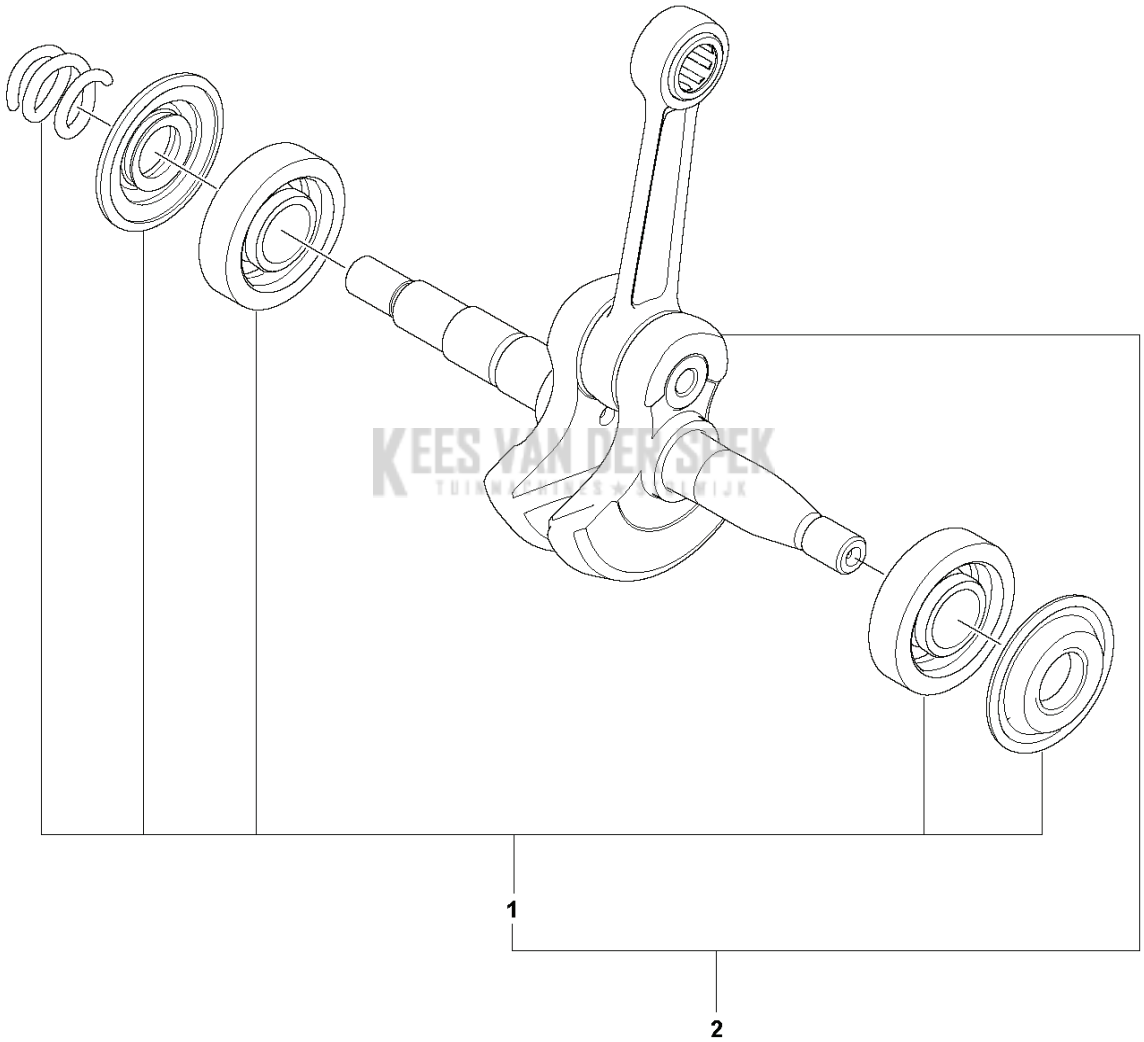

KEES VAN DER SPEK
TUINMACHINES ★ JAPIWIJK

PXM_REF	PXM_ PARTNO	DESCRIPTION	PXM_REMARK	QTY
1	591465401	LAGERSET	Crankshaft Seal	1
2	588619601	KRUKAS COMPL.		1

KEES VAN DER SPEK
TUINMACHINES ★ STOLWIJK

F 130 CYLINDER COVER

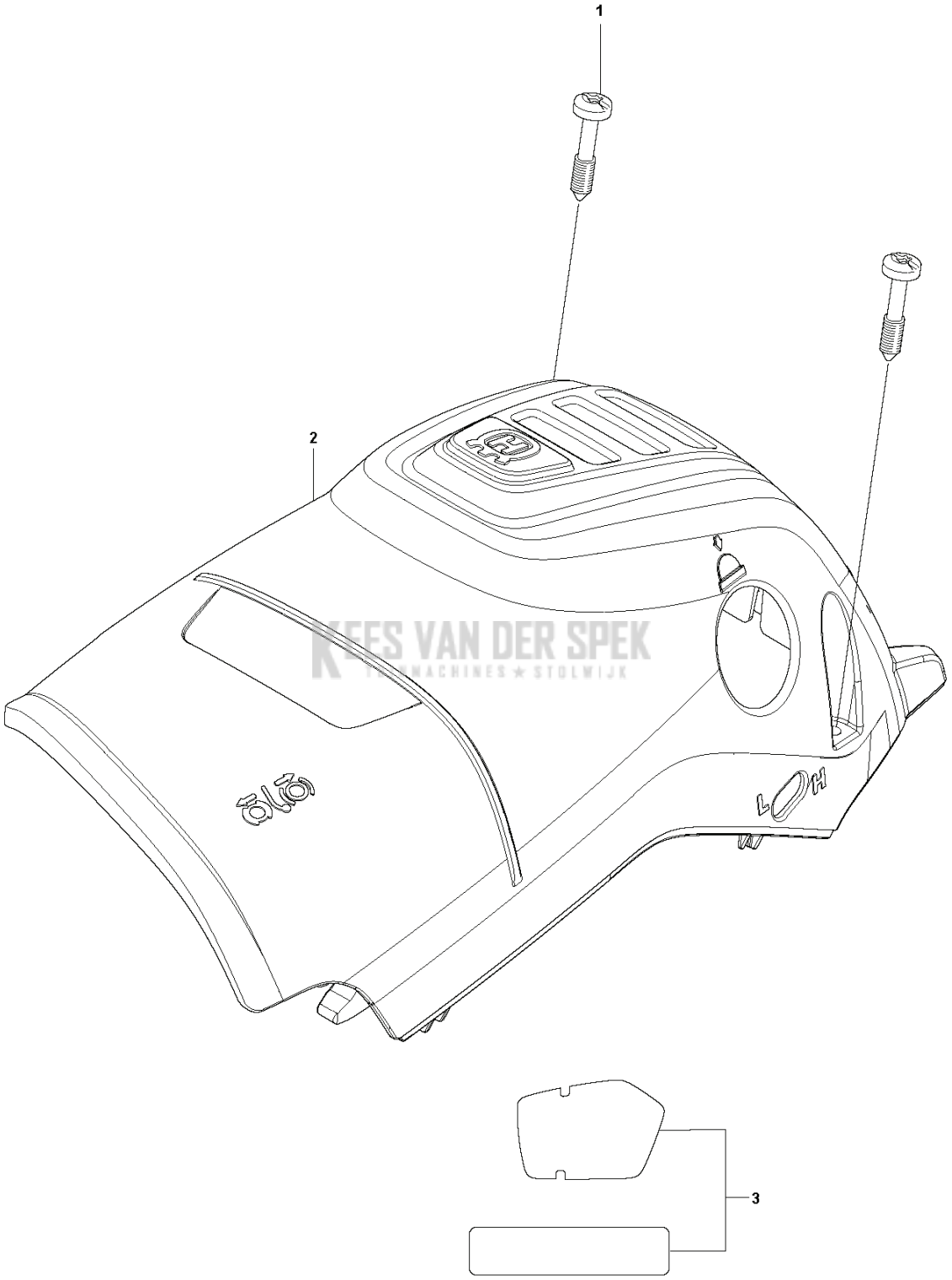

KEES VAN DER SPEK
TUINMACHINES ★ STOLWIJK

PXM_REF	PXM_ PARTNO	DESCRIPTION	PXM_REMARK	QTY
1	503203476	SCREW		3
2	596394801	DEKSEL	CYLINDER	1
3	591465501	SERVICE KIT	DECAL KIT	1

KEES VAN DER SPEK
TUINMACHINES ★ STOLWIJK

G 130 CYLINDER PISTON

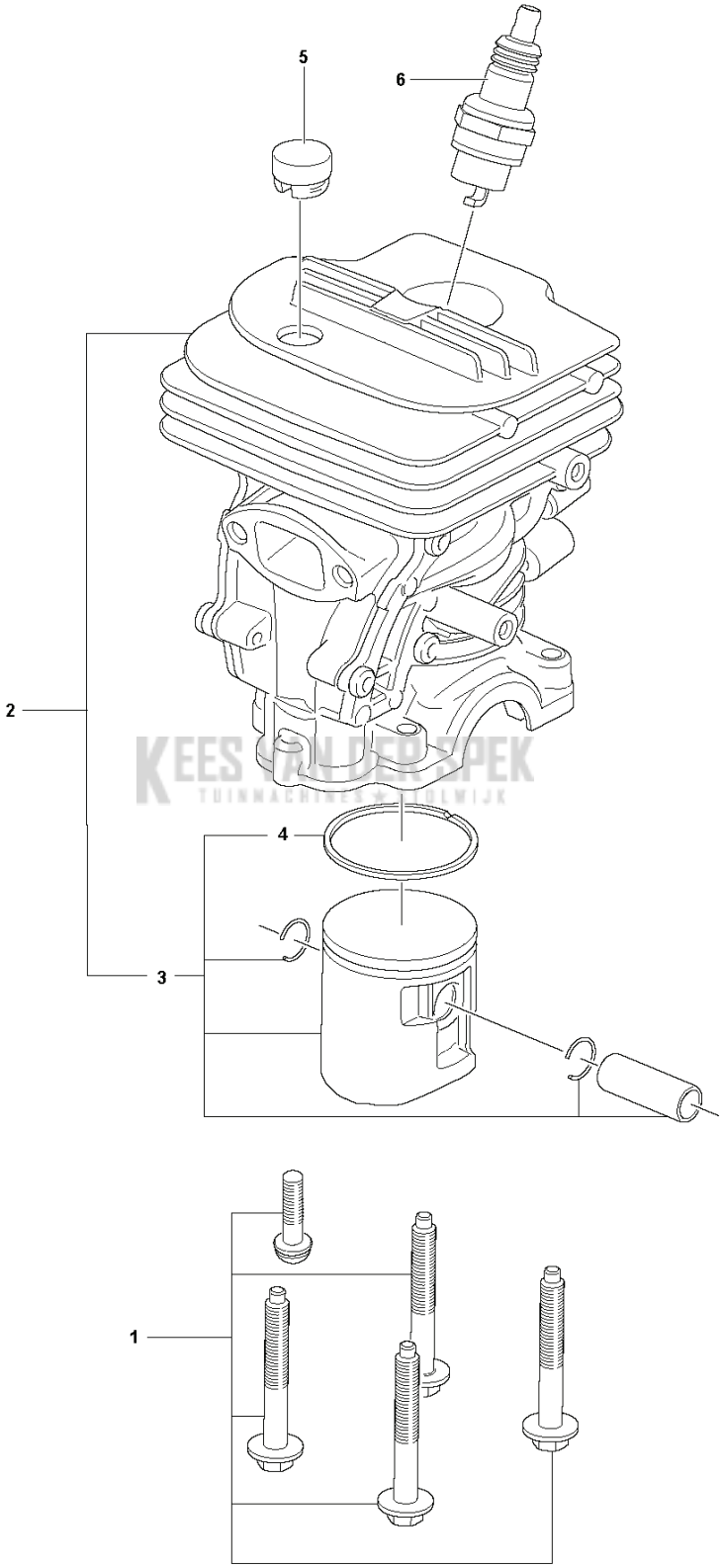

KEES VAN DER SPEK
TUINMACHINES ★ STOLWIJK

PXM_REF	PXM_ PARTNO	DESCRIPTION	PXM_REMARK	QTY	
1	591465601	SERVICE KIT	Cylinder Bolt	1	
2	591465701	SERVICE KIT	Cylinder & Piston	1	
3	591465702	SERVICE KIT	Piston Kit	1	2
4	585040601	ZUIGERVEER		1	2,3
5	590409901	STEUN		1	
6	503235111	BOUGIE	NGK BPMR7A	1	

KEES VAN DER SPEK
TUINMACHINES ★ STOLWIJK

H 130 FUEL TANK

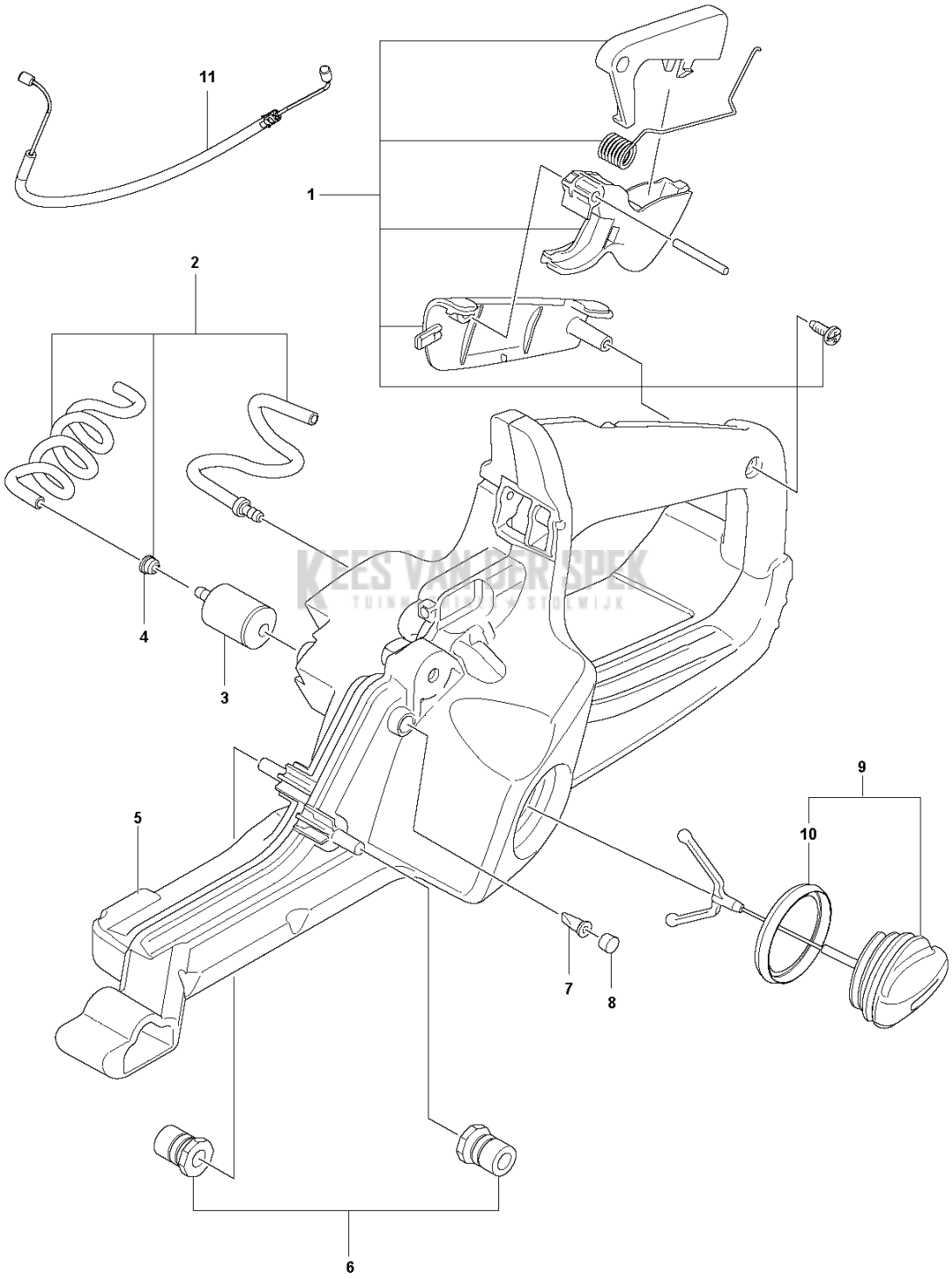

KEES VAN DER SPEK
TUINMACHINES STOMWIJK

PXM_REF	PXM_ PARTNO	DESCRIPTION	PXM_REMARK	QTY	
1	591466001	SERVICE KIT	Trigger Assembly	1	
2	592854401	SERVICE KIT	Fuel Hose	1	
3	503443201	BRANDSTOFFILTER		1	
4	503735801	BUSHING		1	
5	501518402	BRANDSTOFTANK COMPL.		1	
6	591465801	SERVICE KIT	Lateral Support	1	
7	530026119	CONTROLEKLEP		1	
8	530029868	PLUG		1	
9	544111203	TANKDEKSEL COMPL.		1	
10	589241101	PAKKING		1	9
11	582287001	GASKABEL COMPL.		1	

KEES VAN DER SPEK
TUINMACHINES ★ STOLWIJK

130
HANDLE

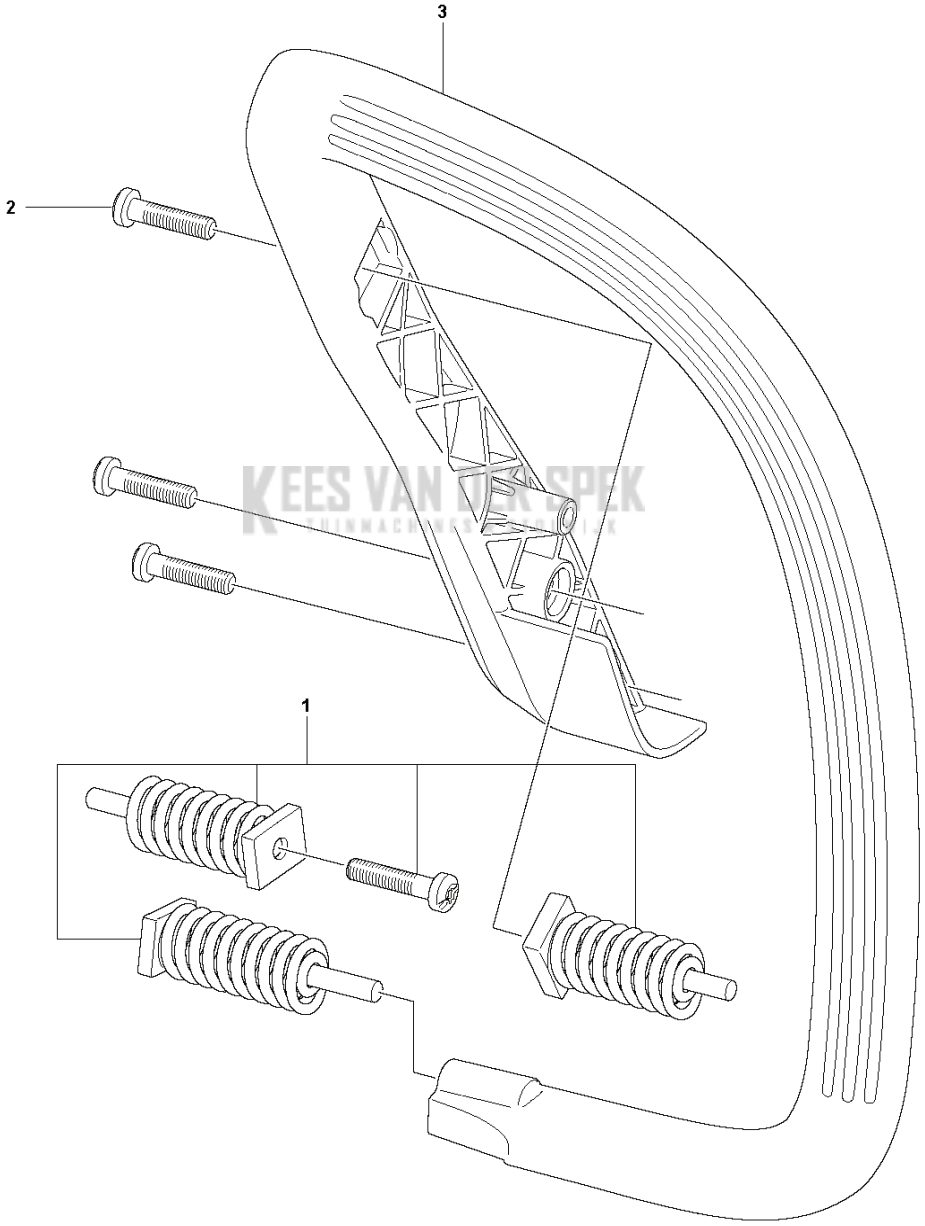

KEES VAN DER SPEK
TUINMACHINESPECIALIST

PXM_REF	PXM_ PARTNO	DESCRIPTION	PXM_REMARK	QTY
1	591466101	SERVICE KIT	Anti-vibration Element	1
2	530016432	SCREW		3
3	501316301	HENDEL		1

KEES VAN DER SPEK
TUINMACHINES ★ STOLWIJK

J 130 IGNITION SYSTEM

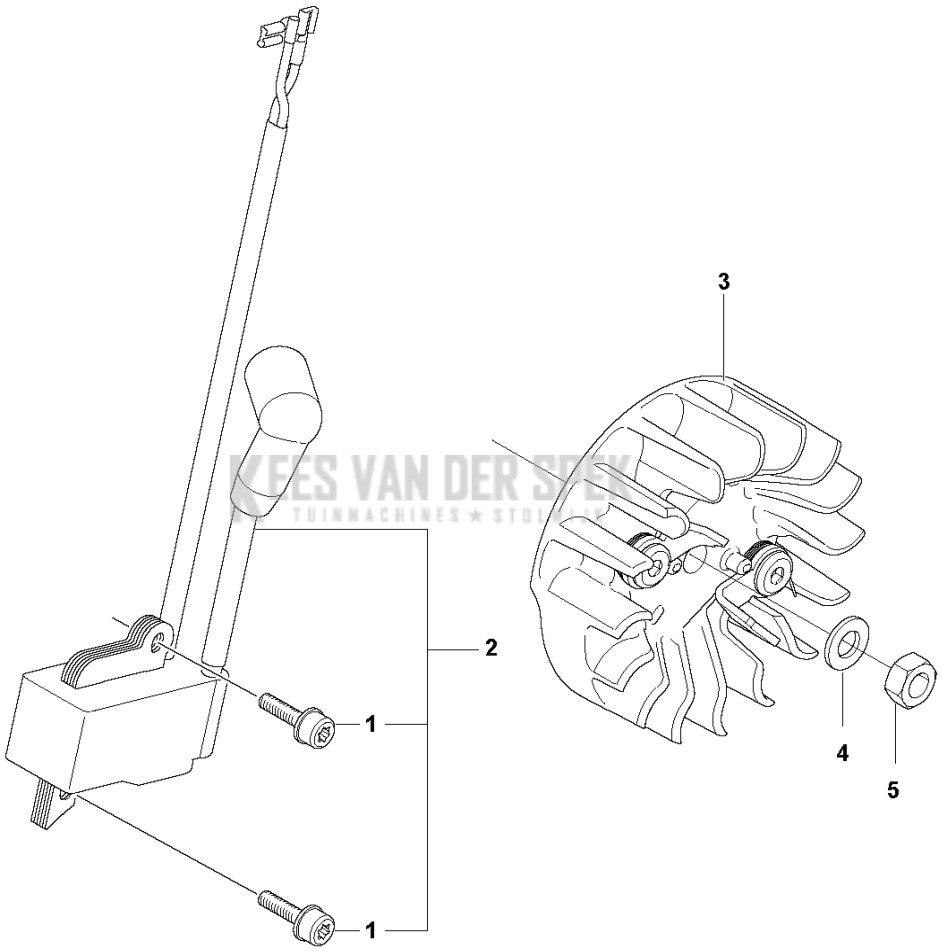

KEES VAN DER SPEK
TUINMACHINES ★ STOMPWIJK

PXM_REF	PXM_ PARTNO	DESCRIPTION	PXM_REMARK	QTY	
1	575962601	SCREW		2	2
2	591466501	SERVICE KIT	Ignition Module	1	
3	544874202	VLIEGWIEL COMPL.		1	
4	530015127	RING		1	
5	530016134	MOER		1	

KEES VAN DER SPEK
TUINMACHINES ★ STOLWIJK

K 130 MUFFLER

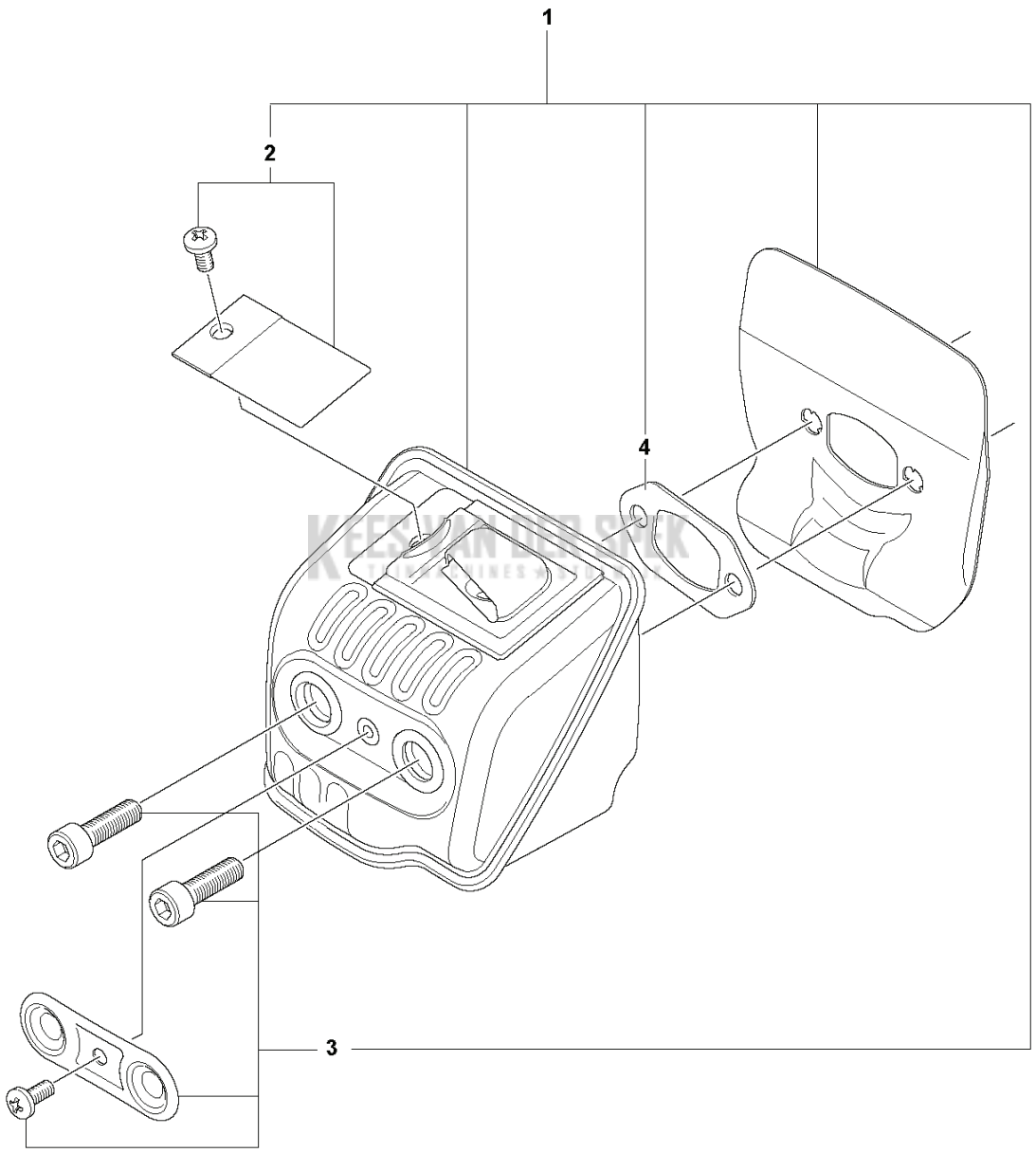

KEES VAN DER SPEK
TUINMACHINES & ONDERDELEN

PXM_REF	PXM_ PARTNO	DESCRIPTION	PXM_REMARK	QTY	
1	501266203	GELUIDDEMPER COMPL.		1	
2	591175501	SERVICE KIT	Spark Arrester	1	1
3	591174601	SERVICE KIT	MUFFLER	1	1
4	501619501	PAKKING		1	1

KEES VAN DER SPEK
TUINMACHINES ★ STOLWIJK

L 130 STARTER

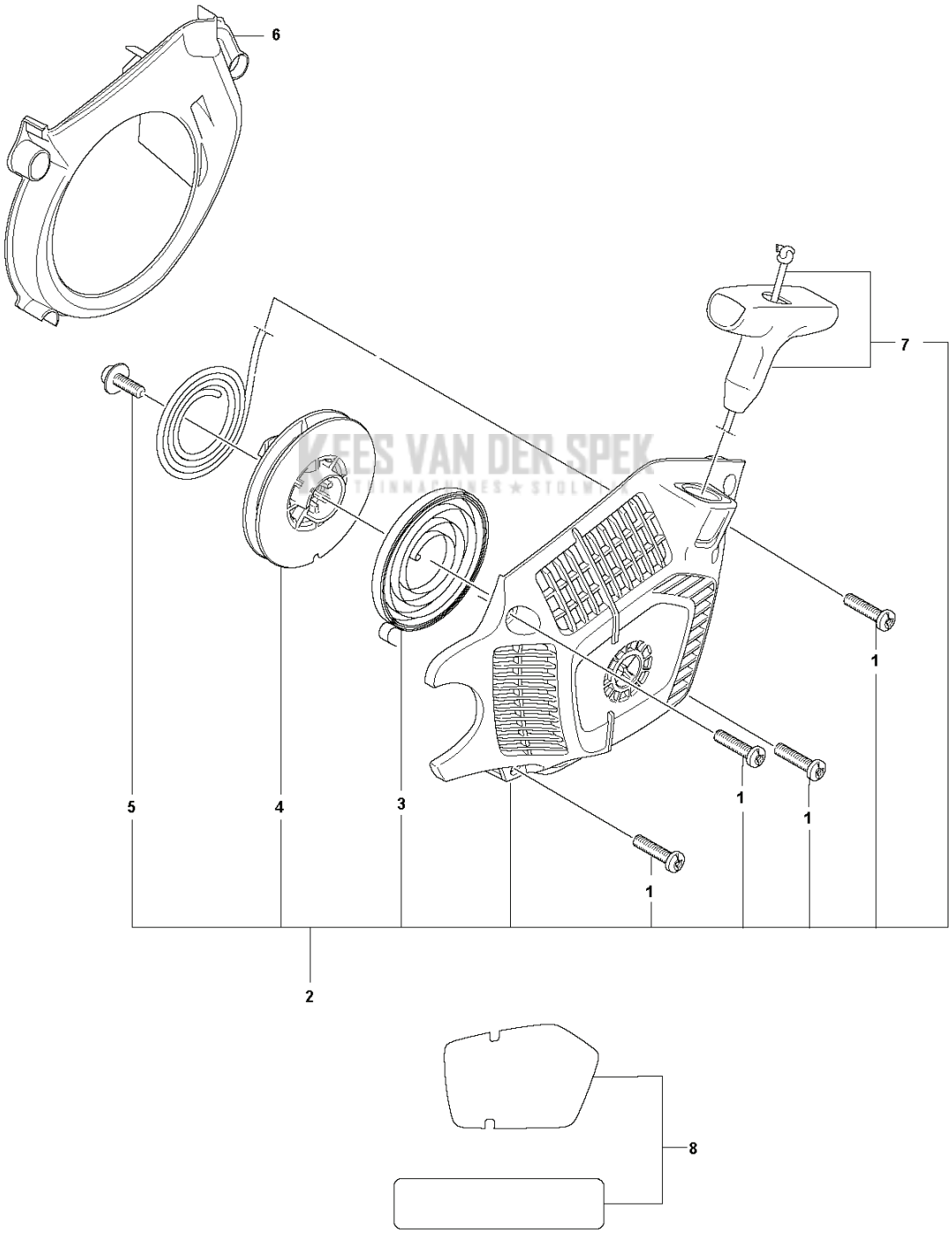

KEES VAN DER SPEK
TUINMACHINES ★ STOLWIJK

PXM_REF	PXM_ PARTNO	DESCRIPTION	PXM_REMARK	QTY	
1	530016432	SCREW		4	2
2	591466701	SERVICE KIT	Starter Housing	1	
3	576657801	VEER		1	2
4	588970701	POELIE		1	2
5	530015920	SCREW		1	2
6	588970601	SCHERM		1	
7	545010010	HENDEL	Handle & Rope	1	2
8	591465501	SERVICE KIT	DECAL KIT	1	

KEES VAN DER SPEK
TUINMACHINES ★ STOLWIJK