STIGA

SWS 800 G (2019)

219802532/S17

Spare parts list
Reservdelar
Repuestos
Ersatzteile
Pièces détachées
Reserve onderdelen
Catalogo ricambi

KEES VAN DER SPEK
TUINMACHINES ★ STOLWIJK

● Use ST. S.p.A. Genuine Spare Parts specified in the parts list for repair and/or replacement.
● The contents described in the parts list may change due to improvement.
● The drawings of the spare parts are only indicative And might Not represent the part in question exactly.
● The indications "right" - "left" - "front" - "rear" refer to the position of the operator when using the machine.
● When placing orders of parts for repair And/Or replacement, make sure that the illustrated parts list Is the one applying to the machine's year of manufacture, as shown on the identification plate attached to the machine.

All rights reserved. No part Of this material may be reproduced Or transmitted, in any form Or by any means, electronic Or mechanical, including photocopying, recording Or by any information storage And retrieval system, without permision in writing from ST. S.p.A.

Copyright ST. S.P.A.

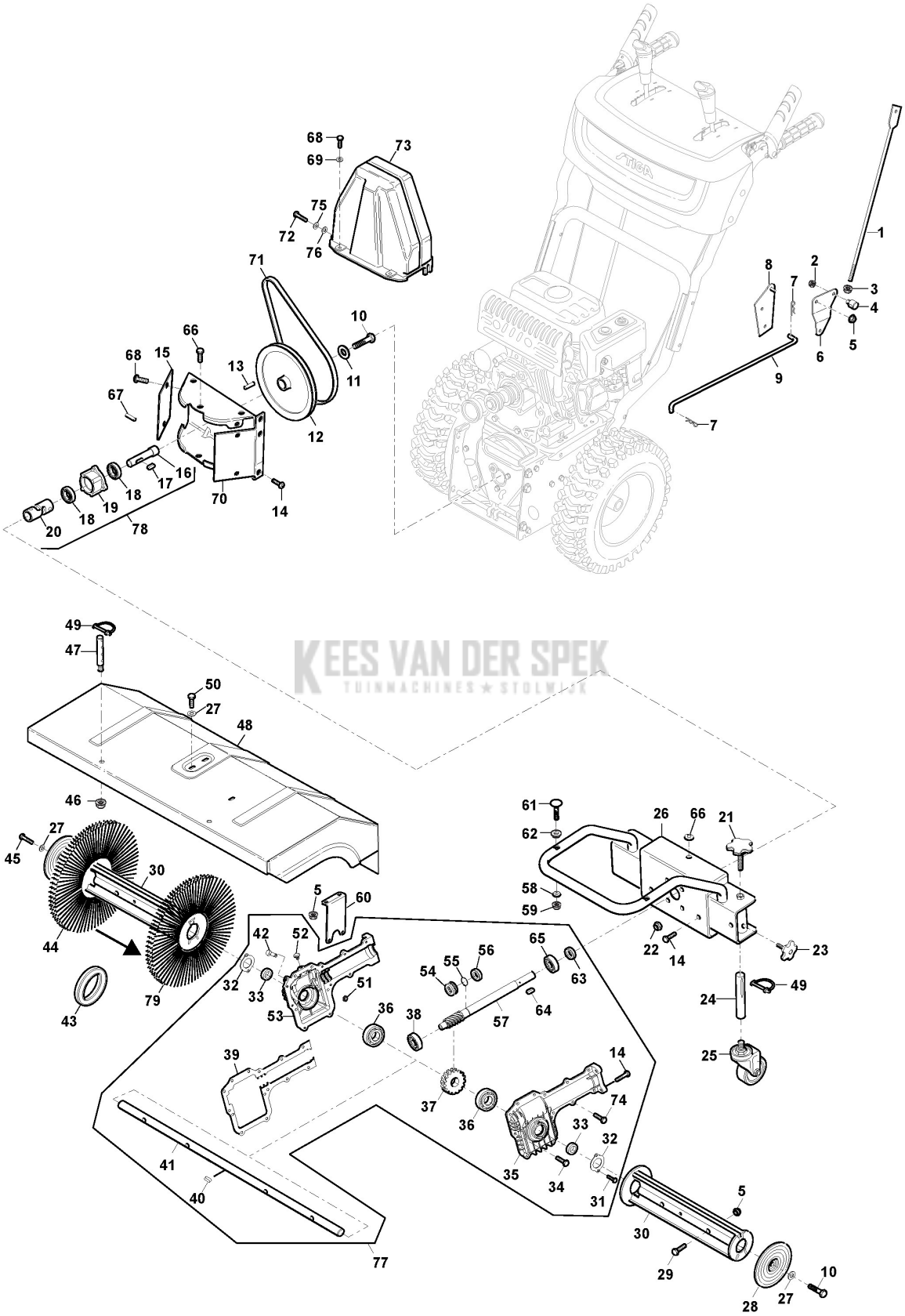

KEES VAN DER SPEK
TUINMACHINES ★ STOLWIJK

Copyright ST. S.P.A.

Body

Ref.nr.	Qty	Item number	Description	Notes	From	Up to
1	1	118820728/0	Direction Rod			
2	3	112154510/0	Nut			
3	1	112293200/0	Nut			
4	1	118820368/0	Pin			
5	9	112155000/0	Nut			
6	1	118820369/0	Welded Direction Plate			
7	3	1811-3080-01	Cotter Pin			
8	1	118820729/0	Welded fixing plate			
9	1	118820730/0	Direction Rod			
10	2	112793301/0	Screw			
11	1	112523060/0	Washer			
12	1	118820253/0	Pulley			
13	1	118820252/0	Key			
14	20	112793102/0	Screw			
15	2	118820373/0	Plate			
16	1	118820374/0	Short Shaft			
17	1	118820375/0	Key			
18	2	118820376/0	Ball Bearing			
19	1	118820377/0	Bearing Housing			
20	1	118820378/0	Gimbal			
21	2	118820731/0	Plastic Screw			
22	2	112295200/0	Nut			
23	2	118820732/0	Plastic Screw			
24	2	118820733/0	Wheel Shaft			
25	2	118820734/0	Wheel			
26	1	118820735/0	Fixing Plate			
27	4	112523060/0	Washer			
28	2	118820383/0	Plate			
29	4	112691100/0	Screw			
30	2	118820736/0	Fixing Plate			
31	4	112727790/0	Screw			
32	2	118820738/0	Oil Cap			
33	2	1811-3143-01	Sealing			
34	10	112791400/0	Screw			
35	1	118820739/0	Right housing			
36	2	118820740/0	Ball Bearing			
37	1	118820386/0	Worm Gear			
38	1	118820751/0	Ball Bearing			
39	1	118820741/0	Washer			
40	1	1811-3144-01	Key			
41	1	118820390/0	Shaft			
42	1	118820423/0	Screw			
43	22	118820391/0	Brush Pad			
44	26	118820392/0	Straight Brush	Straight		
45	1	112793301/0	Screw			
46	2	9739-1031-22	Nut			
47	2	118820393/0	Connector			
48	1	118820743/0	Brush Cover			

KEES VAN DER SPEK
TUINMACHINES STOLWIJK

Copyright ST. S.P.A.

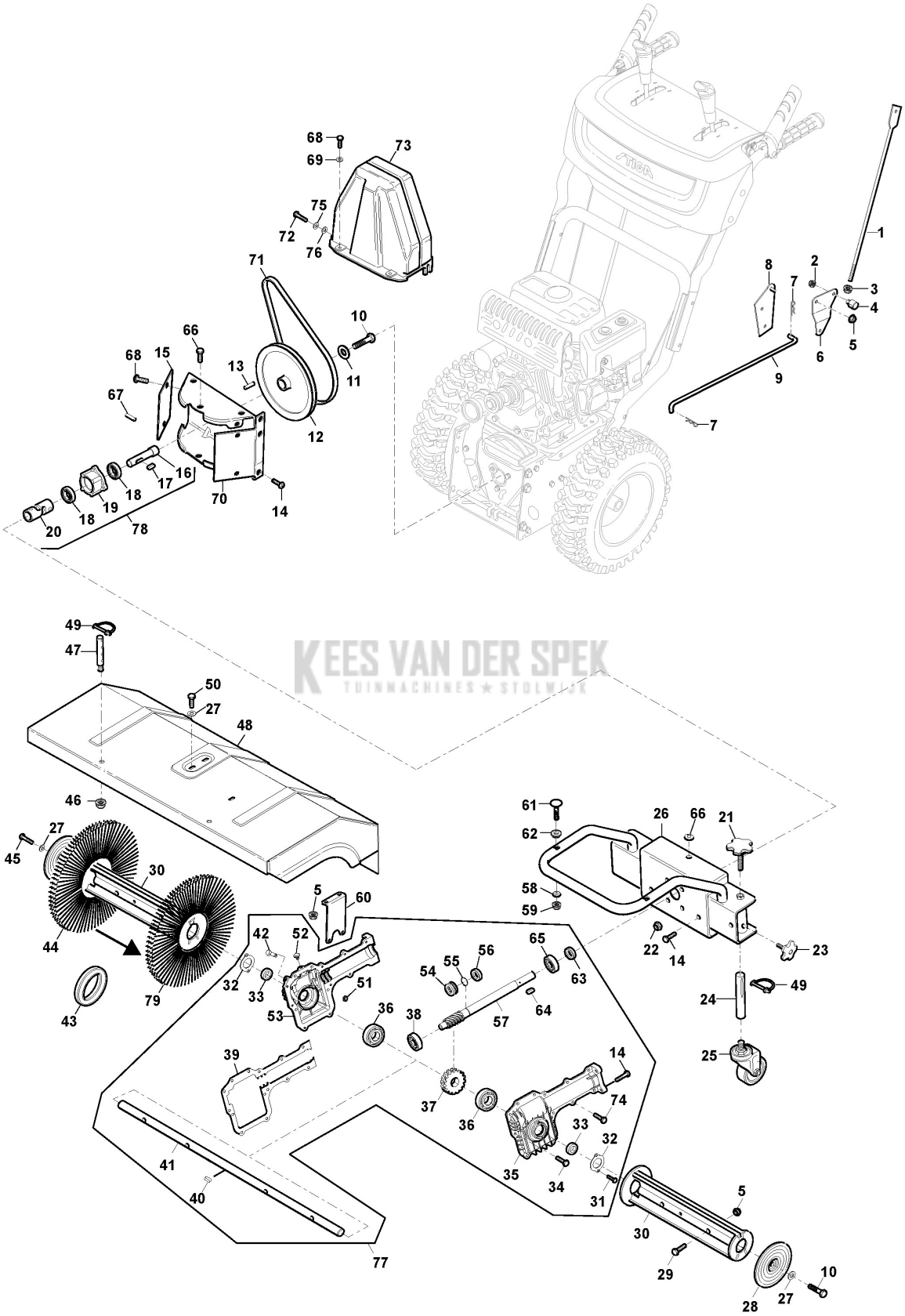

KEES VAN DER SPEK
TUINMACHINES ★ STOLWIJK

Copyright ST. S.P.A.

Body

Ref.nr.	Qty	Item number	Description	Notes	From	Up to
49	2	118820379/0	Cap			
50	2	112792610/0	Screw			
51	2	112154510/0	Nut			
52	1	118820745/0	Air cap			
53	1	118820746/0	Left housing			
54	1	118820158/0	Ball Bearing			
55	1	112609260/0	Seeger			
56	2	118820399/0	Sealing Wheel			
57	1	118820747/0	Worm Shaft			
58	2	112154210/0	Nut			
59	2	118820041/0	Nut			
60	1	118820748/0	Support			
61	2	112793850/0	Screw			
62	2	122671651/0	Washer			
63	1	118820744/0	Seal Ring			
64	1	118820400/0	Key			
65	1	1811-3150-01	Ball bearing			
66	2	118820749/0	Pad			
67	1	118801147/0	Pin			
68	6	112790781/0	Screw			
69	2	112521330/0	Washer			
70	1	118820402/0	Fixing Plate			
71	1	118820750/0	Belt			
72	2	112792611/0	Screw			
73	1	118820404/0	Belt Cover			
74	2	112791500/0	Screw			
75	2	112521331/0	Washer			
76	2	112582100/0	Grower			
77	1	118820787/0	Gear Box Assy			
78	1	118821090/0	Short Shaft Assy			
79	2	118820821/0	Folded Brush	Folded		

KEES VAN DER SPEK
TUINMACHINES STOLWIJK

Copyright ST. S.P.A.

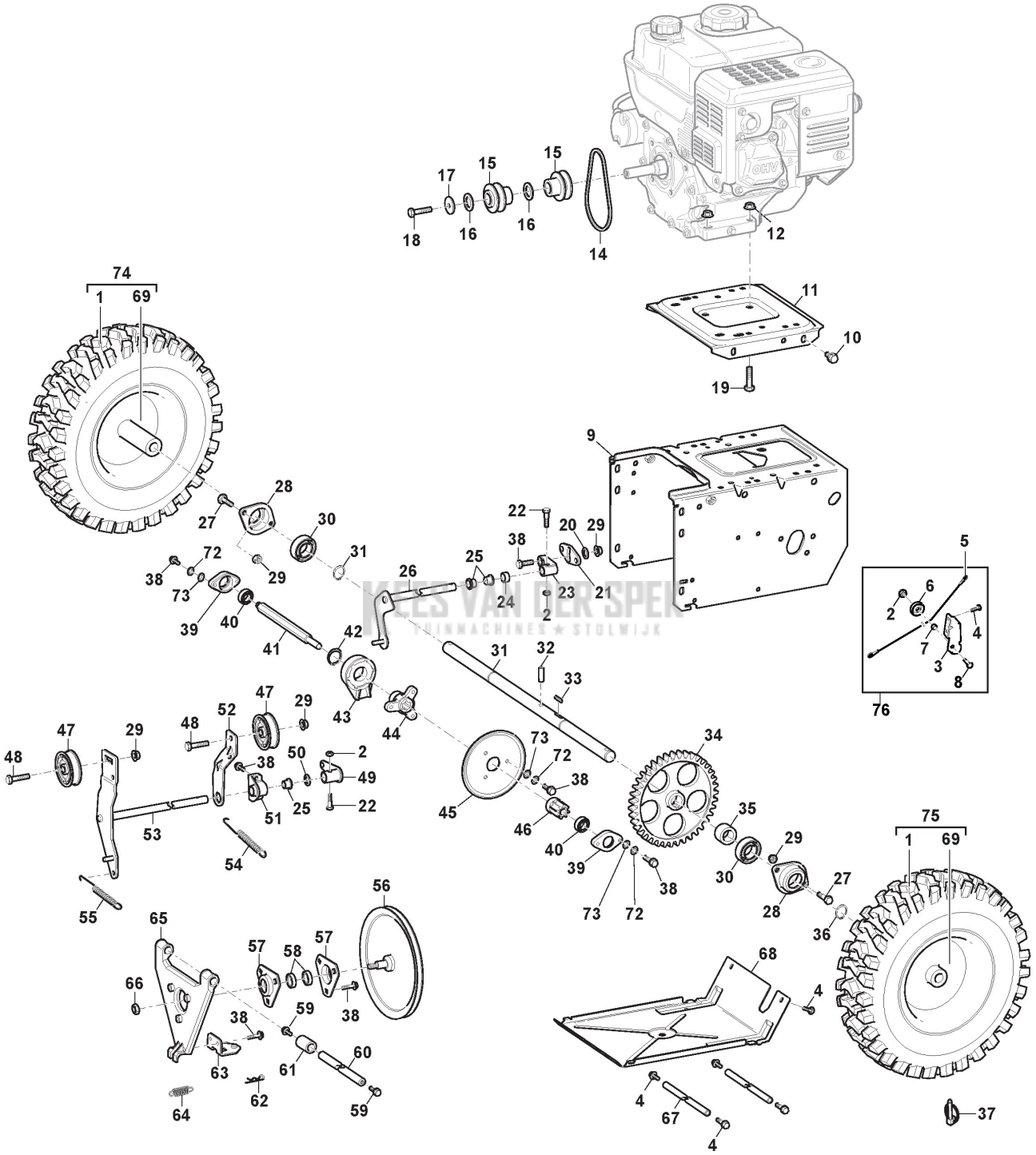

Copyright ST. S.P.A.

Transmission

Ref.nr.	Qty	Item number	Description	Notes	From	Up to
1	2	118820752/0	Tyre			
2	1	112154510/0	Nut			
3	1	118820753/0	Pulley Seat			
4	8	112790781/0	Screw			
5	1	118820299/0	Wire			
6	1	118820300/0	Pulley			
7	1	118820298/0	Sleeve			
8	1	112791400/0	Screw			
9	1	118820754/0	Transmission Case Ass.Y			
10	4	112793102/0	Screw			
11	1	118820149/0	Engine Plate - Grey			
12	4	112154210/0	Nut			
14	1	118820755/0	Drive Belt			
15	2	118820756/0	Drive pulley			
16	4	118820262/0	Gears connector			
17	1	9699-0109-02	Washer			
18	1	112691100/0	Screw			
19	4	112691100/0	Screw			
20	1	112521350/0	Washer			
21	1	118820263/0	Gear Adjuster			
22	2	112791400/0	Screw			
23	1	118820757/0	Gear connector			
24	1	118820265/0	Cushion			
25	3	1811-3113-01	Plastic bushing			
26	1	118820308/0	Strut			
27	4	112792610/0	Screw			
28	2	1811-3115-01	Bearing Housing			
29	7	112155000/0	Nut			
30	2	118820121/0	Ball Bearing			
31	1	118820124/0	Driving Shaft			
32	1	3180390	Pin			
33	1	118820125/0	Key			
34	1	118820222/0	Gear			
35	1	118820122/0	Sleeve			
36	1	112609260/0	Seeger			
37	2	118820379/0	Cap			
38	14	112791200/1	Screw			
39	2	118820223/0	Inner Shaft Seat			
40	2	118820152/0	Ball Bearing			
41	1	118820224/0	Hexagon Shaft			
42	1	118820311/0	Circlip			
43	1	118820312/0	Shift bearing			
44	1	118820634/0	Rubber wheel seat			
45	1	118820635/0	Rubber Wheel			
46	1	118820225/0	Gear			
47	2	1811-3064-01	Tension pulley			
48	2	112793701/0	Screw			
49	1	118820334/0	Tensioner			

KEES VAN DER SPEK
TUINMACHINES STOLWIJK

Copyright ST. S.P.A.

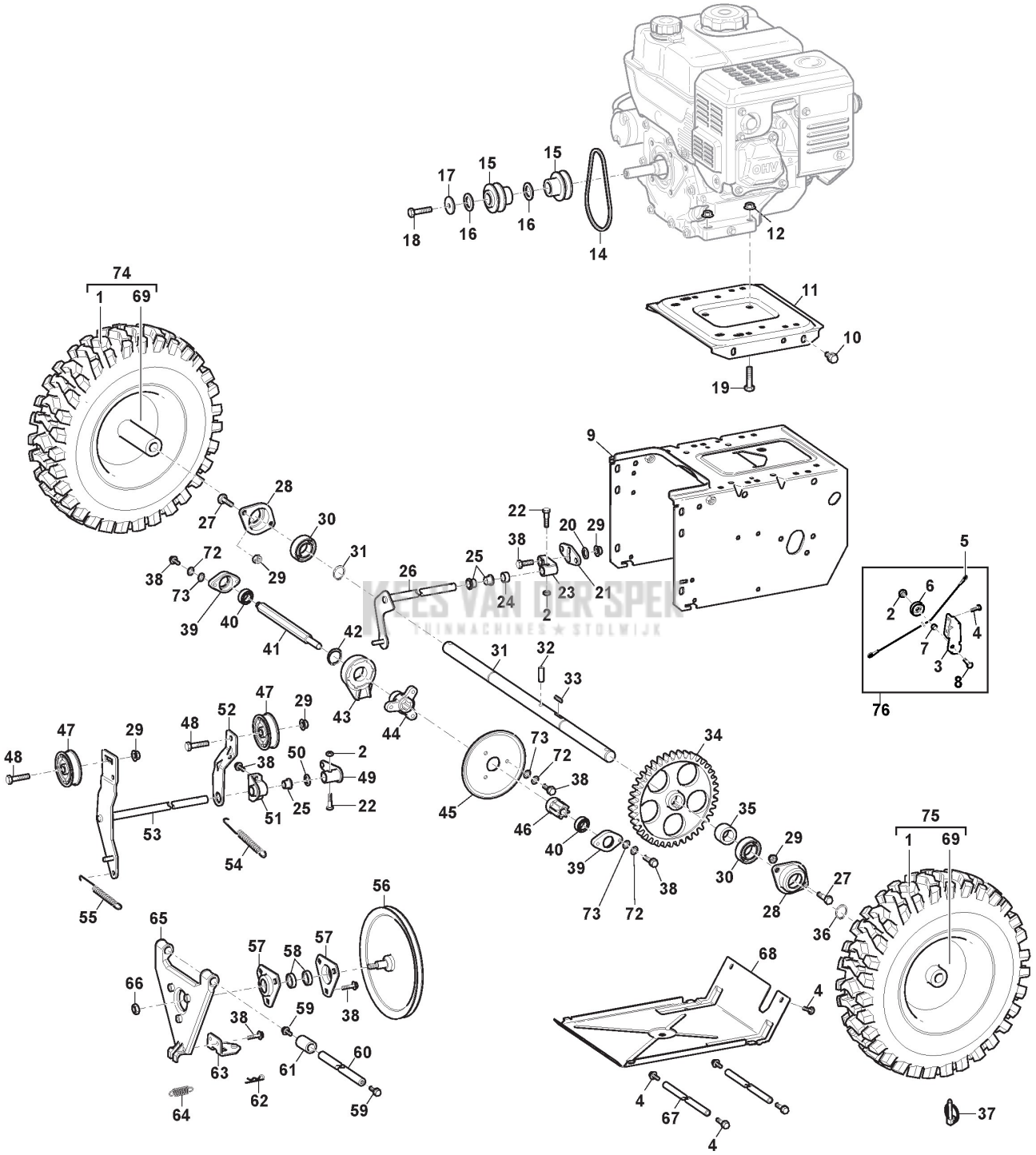

Copyright ST. S.P.A.

Ref.nr.	Qty	Item number	Description	Notes	From	Up to
50	1	112530150/0	Spring Washer			
51	1	118820336/0	Fixing Block			
52	1	118820337/0	Tensioner			
53	1	118820226/0	Tension Assy			
54	1	1811-3118-01	Spring			
55	1	118820343/0	Brake Spring			
56	1	118820339/0	Pulley			
57	2	1811-3116-01	Bearing Housing			
58	2	118820340/0	Ball Bearing			
59	2	112792611/0	Screw			
60	1	1811-3125-01	Strut			
61	2	1811-3061-01	Spacer bush			
62	1	118820348/0	Pin			
63	1	118820227/0	Connector Assy			
64	1	118820349/0	Spring			
65	1	118820229/0	Plate			
66	1	112156603/0	Nut			
67	2	118820295/0	Strut			
68	1	118820758/0	Bottom plate			
69	2	118820759/0	Rim			
70	8	112521330/0	Washer			
71	8	112582100/0	Grower			
72	14	112521331/0	Washer			
73	14	112582100/0	Grower			
74	1	118821113/0	Complete Right Wheel			
75	1	118821114/0	Complete Left Wheel			
76	1	118821109/0	Pulley Seat Assy			

KEES VAN DER SPEK TUINMACHINES STOLWIJK

Copyright ST. S.P.A.

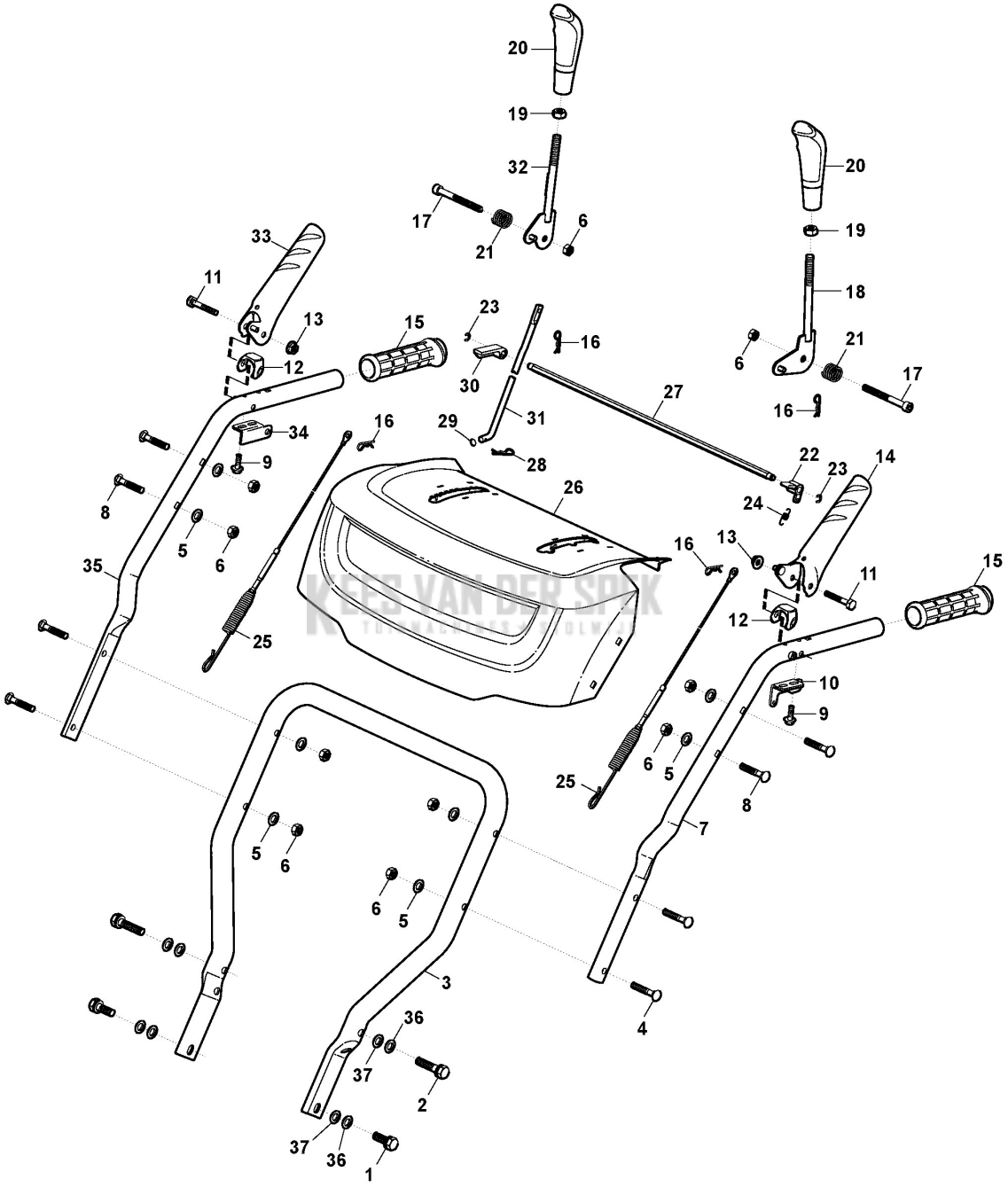

Copyright ST. S.P.A.

Handle

Ref.nr.	Qty	Item number	Description	Notes	From	Up to
1	2	9997-1025-16	Screw			
2	2	112794900/0	Screw			
3	1	118820760/0	Lower handle			
4	4	112819105/0	Screw			
5	8	122671651/0	Washer			
6	8	112155000/0	Nut			
7	1	118820761/0	Left Handle, Upper Part			
8	6	112819100/0	Screw			
9	4	112727794/0	Screw			
10	1	118820762/0	Left Support			
11	2	118820209/0	Screw			
12	2	118820763/0	Washer			
13	2	112292102/0	Nut			
14	1	118820764/0	Left Lever			
15	2	118820198/0	Handle			
16	4	118820348/0	Pin			
17	2	112691700/0	Screw			
18	1	118820765/0	Angle handle			
19	2	112295200/0	Nut			
20	2	118820615/0	Gear Handle			
21	2	1811-3066-01	Spring			
22	1	118820205/0	Support			
23	2	112000930/0	Benzing Ring			
24	1	1811-3067-01	Spring			
25	2	118820406/0	Wire			
26	1	118820766/0	Panel			
27	1	118820767/0	Hexagon axis			
28	1	1811-3080-01	Cotter Pin			
29	1	112521350/0	Washer			
30	1	118820203/0	Support			
31	1	118820768/0	Gear Lever			
32	1	118820769/0	Lever			
33	1	118820770/0	Right Lever			
34	1	118820771/0	Right Support			
35	1	118820772/0	Right Handle, Upper Part			
36	4	112585100/0	Washer			
37	4	112521360/0	Washer			

KEES VAN DER SPEK
TUINMACHINES STOLWIJK

Copyright ST. S.P.A.

Copyright ST. S.P.A.

Labels

Ref.nr.	Qty	Item number	Description	Notes	From	Up to
1	1	114369269/0	Label			
2	1	114369266/0	Label			
3	1	114367495/1	Label			
4	1	114369146/0	Label			
5	1	114369754/0	Label			
6	1	114369755/0	Label			
7	1	114369265/0	Label			

KEES VAN DER SPEK
TUINMACHINES STOLWIJK

Copyright ST. S.P.A.

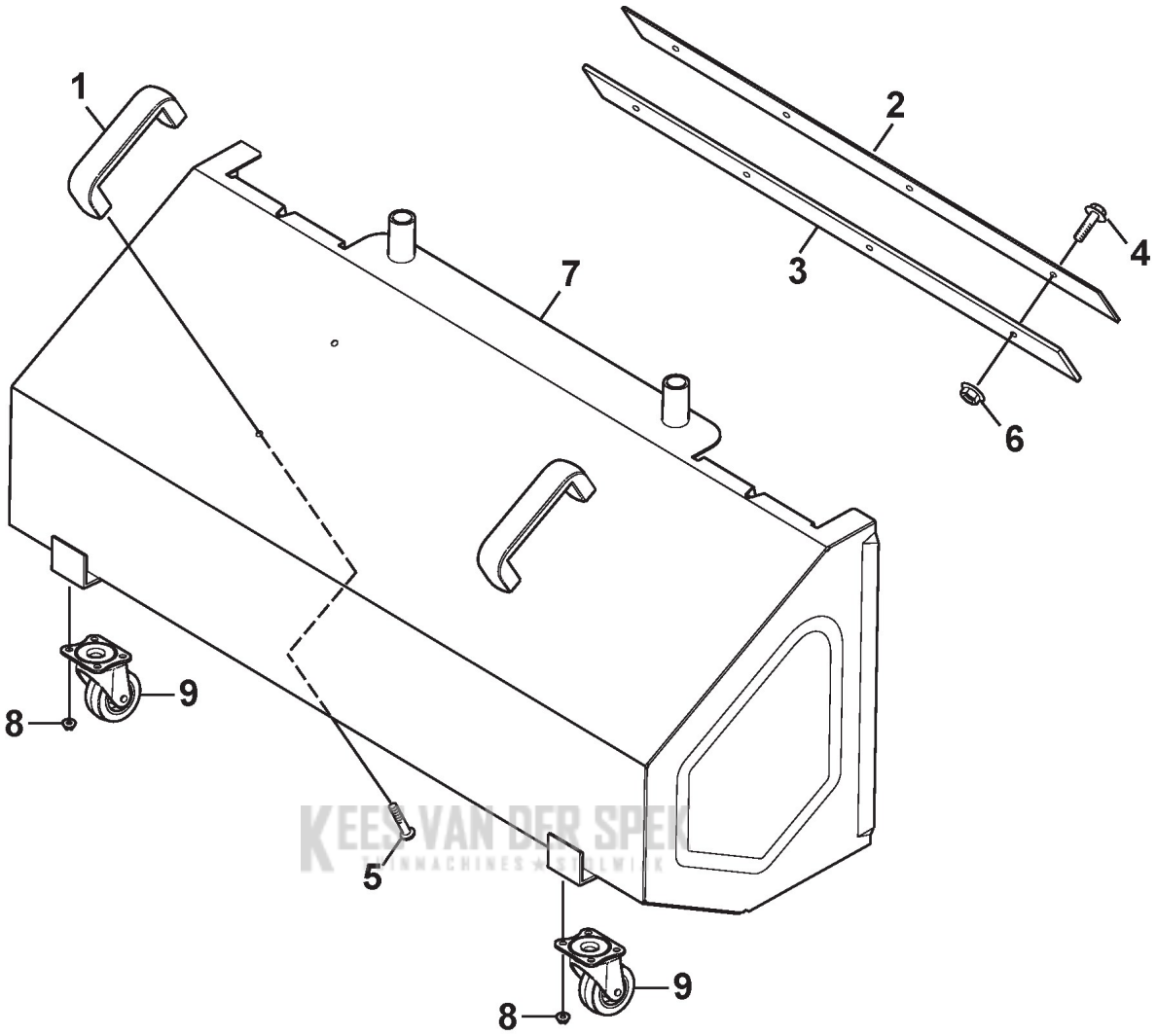

Copyright ST. S.P.A.

Collecting Box

Ref.nr.	Qty	Item number	Description	Notes	From	Up to
1	2	118820418/0	Hanlde			
2	1	118820437/0	Plate			
3	1	118820438/0	Plate			
4	4	112800815/0	Screw			
5	4	112728099/1	Screw			
6	4	112154210/0	Nut			
7	1	118820439/0	Collecting Box Welded			
8	8	118820030/0	Nut			
9	2	118820417/0	Wheel			

KEES VAN DER SPEK
TUINMACHINES STOLWIJK

Copyright ST. S.P.A.

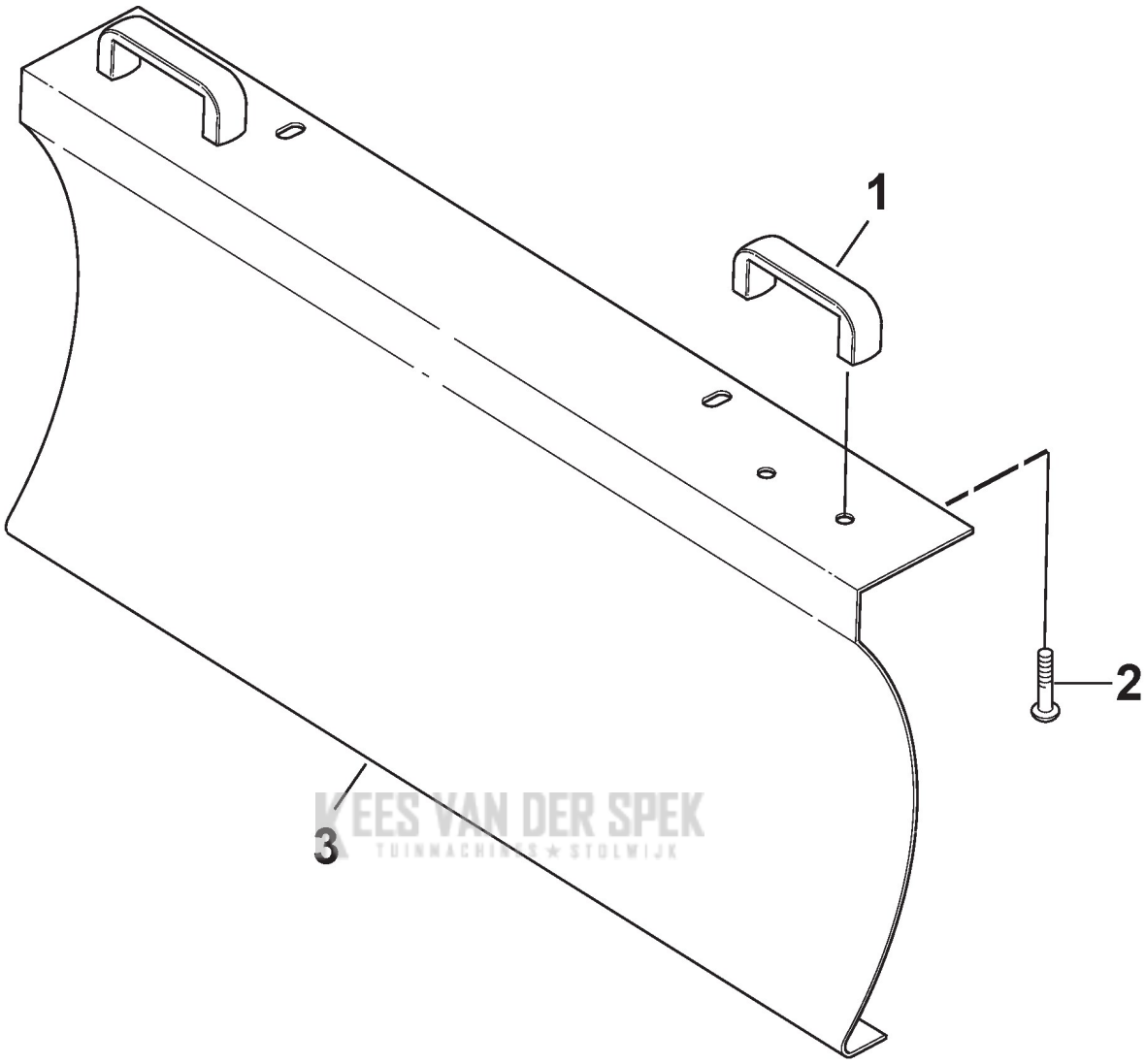

KEES VAN DER SPEK
TUINMACHINES ★ STOLWIJK

Copyright ST. S.P.A.

Snow blade

Ref.nr.	Qty	Item number	Description	Notes	From	Up to
1	2	118820418/0	Hanlde			
2	4	112728099/1	Screw			
3	1	118820436/0	Snow Blade			

KEES VAN DER SPEK
TUINMACHINES STOLWIJK

Copyright ST. S.P.A.

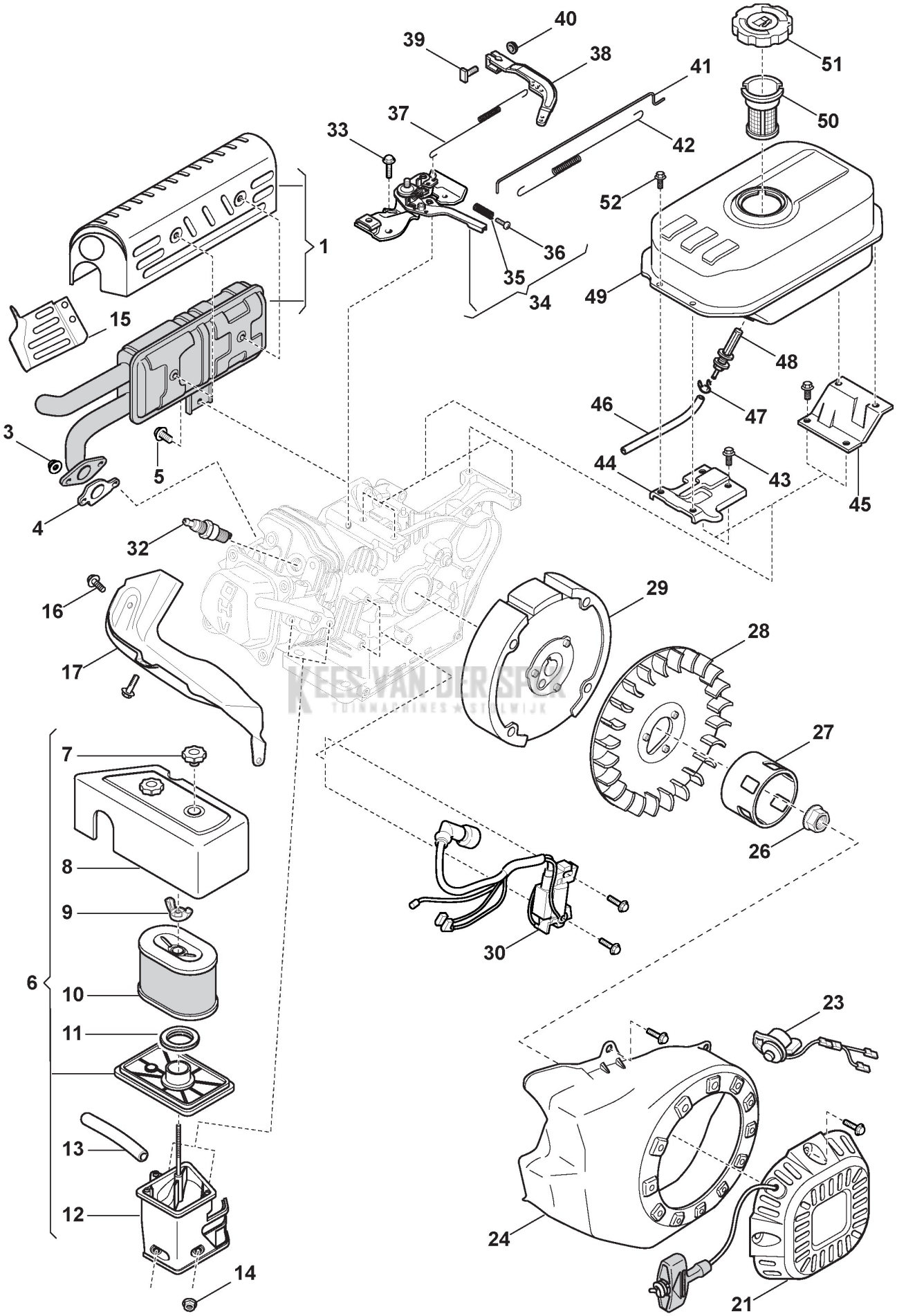

Copyright ST. S.P.A.

Engine - Starter Assy, Tank

Ref.nr.	Qty	Item number	Description	Notes	From	Up to
1	1	118551189/0	Muffler			
3	2	112154210/0	Nut			
4	1	118551190/0	Gasket, Muffler			
5	1	112793102/0	Screw			
6	1	118551185/0	Air Cleaner Assy			
7	1	118551192/0	Knob			
8	1	118551186/0	Air Cleaner Cover			
9	1	112373600/0	Wing Nut			
10	1	118551187/0	Air Filter			
11	1	118551202/0	Gasket			
12	1	118551188/0	Air Cleaner Base			
13	1	118550456/0	Breather Fule Pipe			
14	2	118550806/0	Nut			
15	1	118551191/0	Muffler Protection			
16	2	118550861/0	Screw			
17	1	118551170/0	Guard			
21	1	118551193/0	Starter Assy			
23	1	118551196/0	Stop Switch			
24	1	118551171/0	Cover			
26	1	118550336/0	Nut			
27	1	118551194/0	Starter Cup			
28	1	118551169/0	Starter Cup			
29	1	118550489/0	Flywheel Ass.Y			
30	1	118551195/0	Elettronic Coil			
32	1	9400-0244-00	Spark Plug			
33	2	118550869/0	Screw			
34	1	118551181/0	Remote Control Assy			
35	1	118550810/0	Spring			
36	1	118550811/0	Screw			
37	1	118551179/0	Spring			
38	1	118550807/0	Arm Governor			
39	1	118550805/0	Screw			
40	1	118550806/0	Nut			
41	1	118551178/0	Governor Link			
42	1	118551180/0	Spring			
43	4	112791500/0	Screw			
44	1	118551183/0	Tank Support			
45	1	118551182/0	Tank Support			
46	1	118550504/0	Fuel Pipe			
47	2	118550872/0	Pipe Clip			
48	1	118550500/0	Fuel Tank Hose Connection			
49	1	118550501/0	Fuel Tank			
50	1	118551176/0	Fuel Filter			
51	1	118551177/0	Fuel Cap			
52	4	112790781/0	Screw			

KEES VAN DER SPEK TUINMACHINES STOLWIJK

Copyright ST. S.P.A.

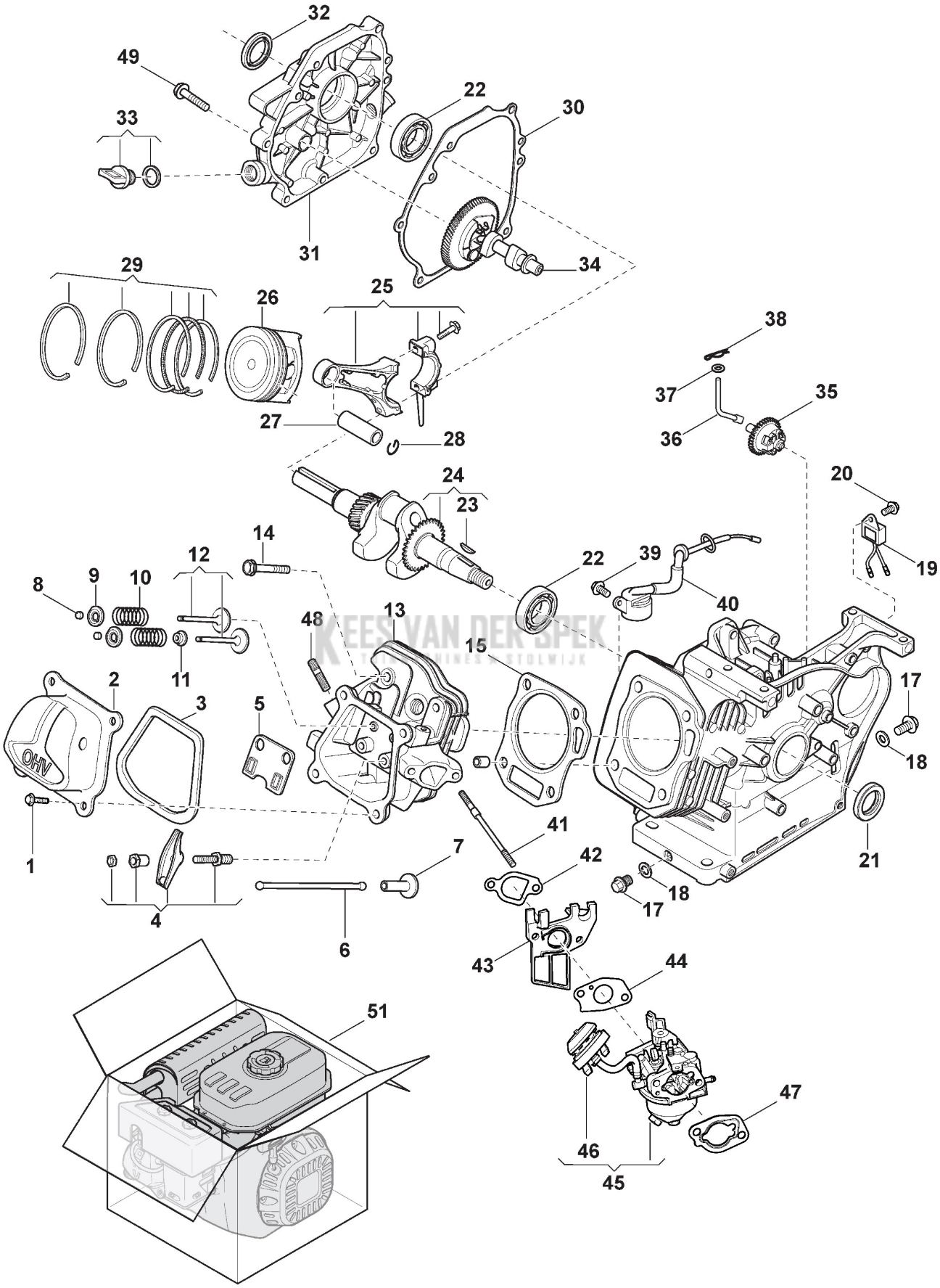

KEES VAN DER SPEK

Copyright ST. S.P.A.

Ref.nr.	Qty	Item number	Description	Notes	From	Up to
1	4	118550816/0	Screw			
2	1	118550784/0	Cover			
3	1	118551163/0	Gasket			
4	2	118550273/0	Valve Arm Set			
5	1	118550475/0	Valve Lifter			
6	2	118550474/0	Push Rod			
7	2	118550623/0	Valve Lifter			
8	2	118551166/0	Valve keeper			
9	2	118551167/0	Retainer			
10	2	118550896/0	Spring			
11	1	118551168/0	Gasket			
12	1	118551203/0	Valve Assy, Intake + Exhaust			
13	1	118551162/0	Cylinder Head			
14	4	118551200/0	Screw			
15	1	118550783/0	Gasket			
17	2	118550460/0	Drain Plug bolt			
18	2	118550793/0	Washer , Drain Plug			
19	1	118551198/0	Sensor			
20	1	118550869/0	Screw			
21	1	118550379/0	Oil Seal			
22	2	118550280/0	Ball Bearing			
23	1	118550288/0	Woodruff Key			
24	1	118550800/0	Crankshaft			
25	1	118550519/0	Connecting Rod			
26	1	118551164/0	Piston			
27	1	118550786/0	Piston Pin			
28	2	118551201/0	Washer, Piston Pin			
29	1	118551165/0	Piston, Ring Set			
30	1	118550782/0	Crankcase Gasket			
31	1	118551161/0	Crankase Cover			
32	1	118550379/0	Oil Seal			
33	1	118551160/0	Oil Tank Cap			
34	1	118550624/0	Camshaft assy			
35	1	118550787/0	Speed Governor Assy			
36	1	118550459/0	Shaft, Governor Arm			
37	1	118550858/0	Washer			
38	1	118550856/0	Cotter Pin			
39	1	118551197/0	Oil Level Switch			
40	2	118550816/0	Screw			
41	2	118550299/0	Stud Bolt			
42	1	118551174/0	Carburetor Gasket			
43	1	118551175/0	Intake Manifold			
44	1	118551173/0	Carburetor Gasket			
45	1	118551172/0	Carburettor			
46	1	118551184/0	Air Purge Pump			
47	1	118550482/0	Spacer			
48	2	118550454/0	Stud Bolt			
49	6	118551199/0	Screw			

KEES VAN DER SPEK TUINMACHINES STOLWIJK

Copyright ST. S.P.A.

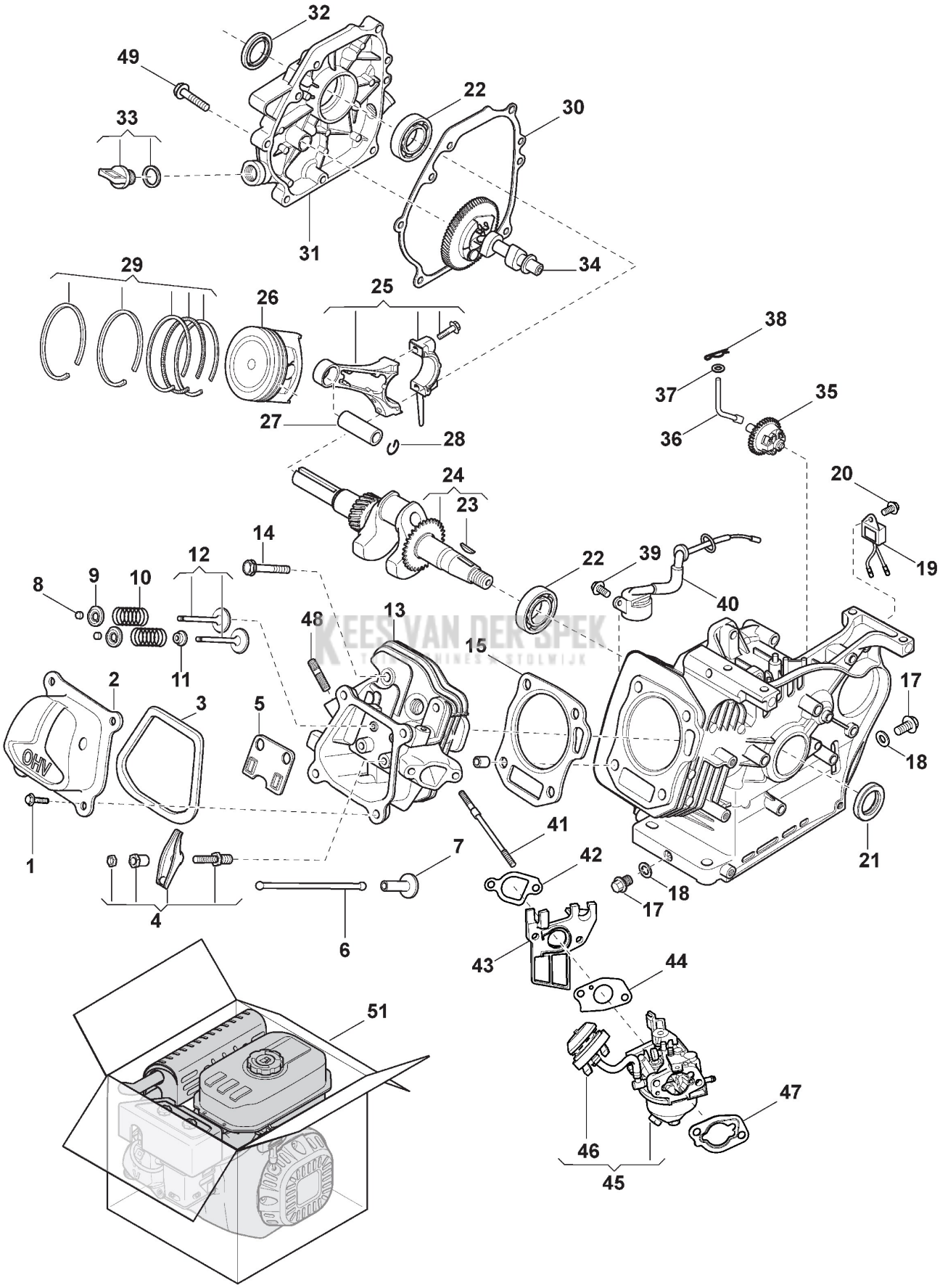

KEES VAN DER SPEK

Copyright ST. S.P.A.

Ref.nr.	Qty	Item number	Description	Notes	From	Up to
51	1	118551204/0	Engine Assembled			

KEES VAN DER SPEK
TUINMACHINES STOLWIJK

Copyright ST. S.P.A.