STIGA

COMBI 3072 H (2019)

2T0220281/14

Spare parts list
Reservdelar
Repuestos
Ersatzteile
Pièces détachées
Reserve onderdelen
Catalogo ricambi

KEES VAN DER SPEK
TUINMACHINES ★ STOLWIJK

- Use ST. S.p.A. Genuine Spare Parts specified in the parts list for repair and/or replacement.
- The contents described in the parts list may change due to improvement.
- The drawings of the spare parts are only indicative And might Not represent the part in question exactly.
- The indications "right" - "left" - "front" - "rear" refer to the position of the operator when using the machine.
- When placing orders of parts for repair And/Or replacement, make sure that the illustrated parts list Is the one applying to the machine's year of manufacture, as shown on the identification plate attached to the machine.

All rights reserved. No part Of this material may be reproduced Or transmitted, in any form Or by any means, electronic Or mechanical, including photocopying, recording Or by any information storage And retrieval system, without permision in writing from ST. S.p.A.

Copyright ST. S.P.A.

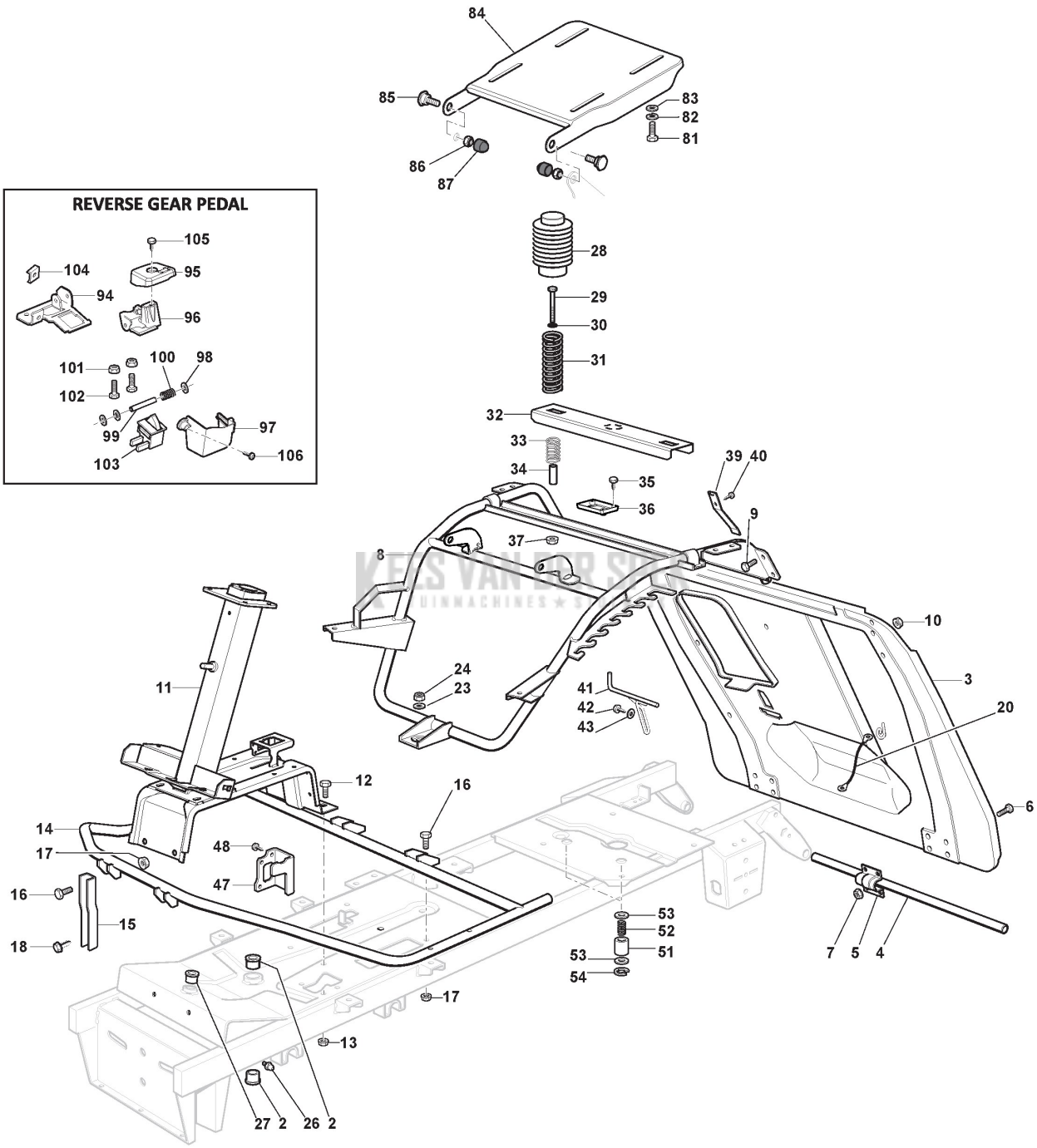

Copyright ST. S.P.A.

Ref.nr.	Qty	Item number	Description	Notes	From	Up to
2	2	125034002/1	Bushing			
3	1	384545057/3	Rear Plate			
4	1	127037000/1	Rear Plate Fulcrum			
5	2	325547012/1	Plate			
6	8	112791213/1	Screw			
7	8	112292102/0	Nut			
8	1	384801149/0	Chassis	To 31-August-2016		
8	1	384801149/1	Chassis	From 01-September-2016		
9	4	112792611/0	Screw			
10	4	112293201/0	Nut			
11	1	382785243/0	Steering Column Support			
12	4	112792611/0	Screw			
13	4	112293201/0	Nut			
14	1	384801107/3	Footboard Support			
15	2	327787025/0	Support			
16	4	112792611/0	Screw			
17	4	112293201/0	Nut			
18	2	112735120/0	Screw			
20	1	384040300/0	Rear Plate			
23	1	112523060/0	Washer			
24	1	112155000/0	Nut			
26	1	112379511/0	Grease Dispenser			
27	1	125034001/0	Brass			
28	2	325122003/0	Hood			
29	2	112691400/0	Screw			
30	2	112521350/0	Washer			
31	2	127430596/0	Spring			
32	1	327543047/0	Plate			
33	2	125430263/0	Spring			
34	2	125160048/0	Spacer			
35	2	112728686/0	Screw			
36	1	325785379/1	Support			
37	2	112293201/0	Nut			
39	1	127430600/0	Spring			
40	1	112735110/0	Screw			
41	1	127294001/0	Rear Conveyor Guide			
42	1	112735120/0	Screw			
43	1	112523040/0	Washer			
47	1	327772095/0	Micro Handbrake Stirrup Support			
48	2	112735105/0	Screw			
51	2	127047012/0	Fast Release Bush Rider			
52	2	127430577/0	Spring			
53	4	325670008/1	Washer			
54	2	112000955/0	Benzing Ring			
81	4	112793102/0	Screw			
82	4	112583500/0	Grower			
83	4	112523060/0	Washer			
84	1	382547061/0	Plate			

KEES VAN DER SPEK TUINMACHINES STOLWIJK

Copyright ST. S.P.A.

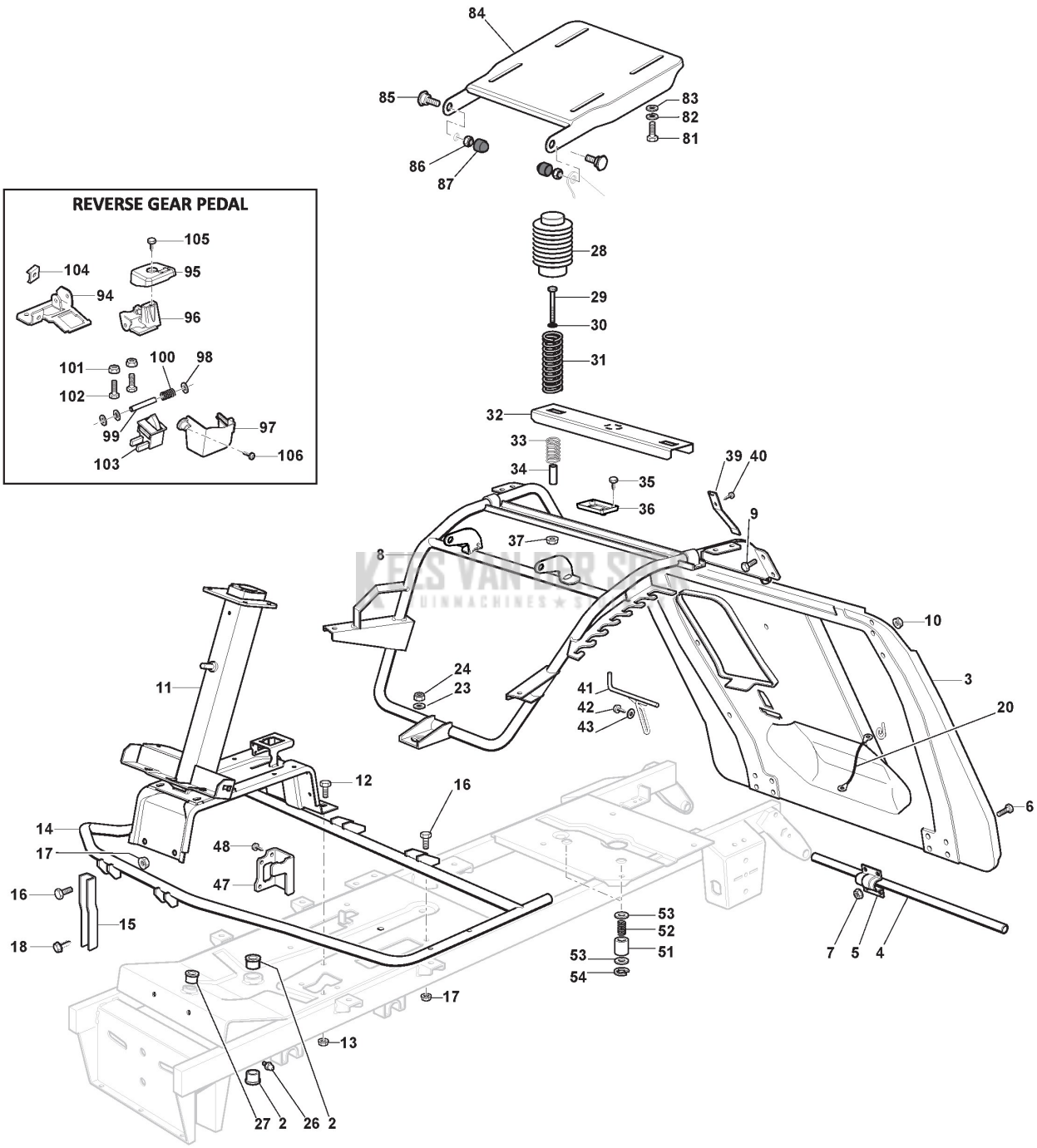

Copyright ST. S.P.A.

Ref.nr.	Qty	Item number	Description	Notes	From	Up to
85	2	122524970/2	Fulcrum Pin	To 31-August-2014		
85	1	122524970/3	Pin	From 01-September-2014		
86	2	112155010/0	Nut			
87	2	118203854/0	Cap			
94	1	327773091/0	Bracket	To 31-August-2015		
94	1	327773093/0	Bracket	From 01-September-2015		
95	1	327110564/0	Cover			
96	1	327787113/0	Support			
97	1	327600182/0	Guard	To 31-August-2015		
97	1	327600183/0	Guard	From 01-September-2015		
98	2	112604896/0	Crown Fastener			
99	1	122517866/0	Pin			
100	1	127430601/0	Spring			
101	2	112791200/1	Screw	To 31-August-2015		
101	1	112791213/1	Screw	From 01-September-2015		
102	2	112292102/0	Nut			
103	1	119410613/0	Microswitch	To 31-August-2019		
103	1	119410622/1	Microswitch	From 01-September-2019		
104	1	112437503/0	Plate			
105	1	112728686/0	Screw			
106	1	112789008/0	Screw			

KEES VAN DER SPEK
TUINMACHINES STOLWIJK

Copyright ST. S.P.A.

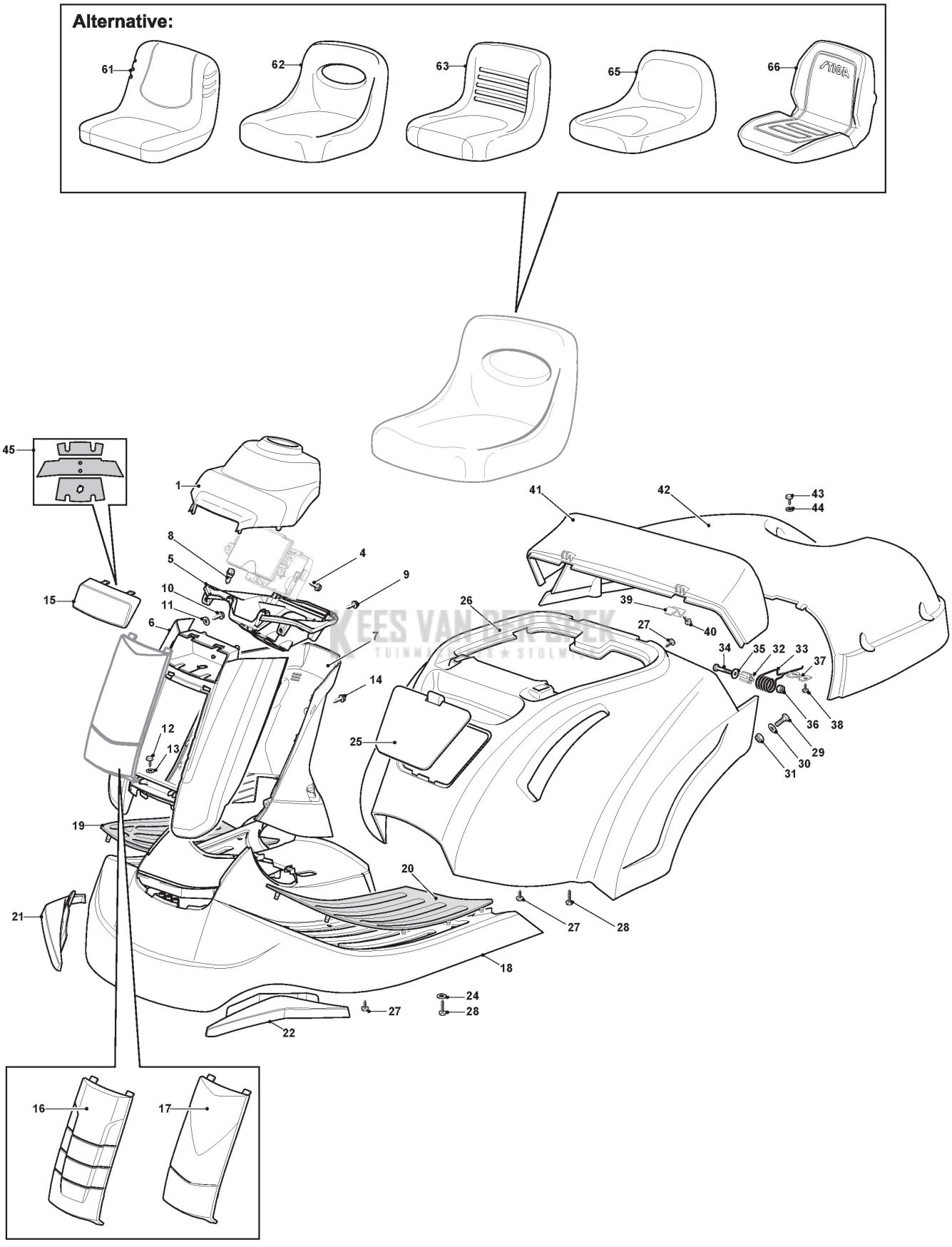

Copyright ST. S.P.A.

Body

Ref.nr.	Qty	Item number	Description	Notes	From	Up to
1	1	327109535/0	Dashboard Cover Grey			
4	2	112735403/0	Screw			
5	1	327787084/0	Lights And Card Support			
6	1	327787079/1	Steering Column Protection, Yellow			
7	1	327787103/0	Rear Cover, Yellow	Grey NCS		
8	4	125943010/0	Screw			
9	2	112735403/0	Screw			
10	2	112735403/0	Screw			
11	2	112523020/0	Washer			
12	1	112735410/0	Screw			
13	1	112523020/0	Washer			
14	4	112735403/0	Screw			
15	1	325410913/0	Grill	Transparent		
16	1	327110545/0	Front Cover, Grey			
18	1	327110358/3	Footboard Cover, Yellow	Yellow		
19	1	127110304/0	Right Footboard Cover			
20	1	127110305/1	Left Footboard Cover			
21	1	327110501/0	Black Wheels Cover, Right			
22	1	327110502/0	Black Wheels Cover, Left			
24	4	112523040/0	Washer			
25	1	327109516/1	Front Cover Yellow	Yellow		
26	1	384110136/3	Wheels Cover (Hydro) Yellow	Yellow		
27	10	112735406/0	Screw			
28	8	112735410/0	Screw			
29	2	112791213/1	Screw			
30	2	112523040/0	Washer			
31	2	112154510/0	Nut			
32	2	127047003/0	Bushing			
33	2	127430551/1	Spring			
34	2	112691200/0	Screw			
35	2	112523070/0	Washer			
36	2	112155000/0	Nut			
37	2	327546001/0	Plate			
38	4	112735406/0	Screw			
39	2	327546003/0	Plate			
40	2	112735406/0	Screw			
41	1	327110360/1	Yellow Fixe Grass-Catcher Cover	Yellow		
42	1	327110361/1	Grass-Catcher Cover, Mobile Yellow	Yellow		
43	4	112729601/1	Screw			
44	4	112523020/0	Washer			
45	1	114366202/0	Light Label			
66	1	125722477/0	Seat			

KEES VAN DER SPEK
TUINMACHINES STOLWIJK

Copyright ST. S.P.A.

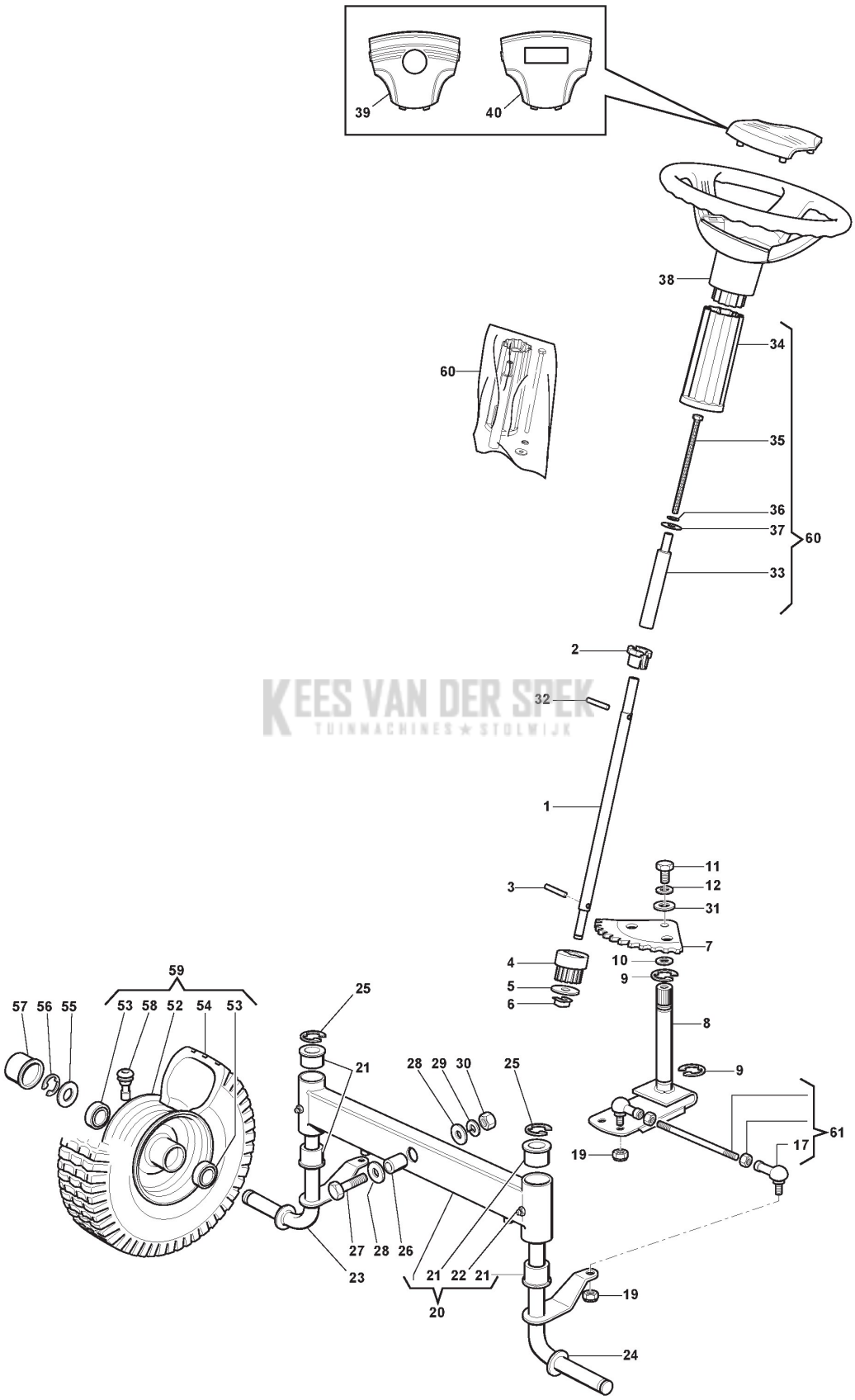

KEES VAN DER SPEK
TUINMACHINES ★ STOLWIJK

Copyright ST. S.P.A.

Steering

Ref.nr.	Qty	Item number	Description	Notes	From	Up to
1	1	127520053/0	Steering Column			
2	1	325038004/0	Bushing			
3	1	112622650/0	Dowel pin			
4	1	127570050/0	Pinion			
5	1	112521370/0	Washer			
6	1	112436030/0	Plate			
7	1	384735551/0	Steering Sector			
8	1	384000501/0	Shaft			
9	2	112001000/0	Benzing Ring			
10	2	112520031/0	Washer			
11	1	112793102/0	Screw			
12	1	112583500/0	Grower			
13	2	122746609/0	Joint			
19	4	112156602/0	Nut			
20	1	184034057/0	Complete Forecarriege Equalizer Ass.Y			
21	4	125034002/1	Bushing			
22	2	112379511/0	Grease Dispenser			
23	1	384230401/0	Right Stub Axle			
24	1	384230403/0	Left Stub Axle			
25	2	112001000/0	Benzing Ring			
26	1	125160016/0	Spacer	To 31-August-2013		
26	1	125160016/1	Spacer	From 01-September-2013		
27	1	112692695/0	Screw			
28	2	112523100/0	Washer			
29	1	112587100/0	Grower			
30	1	112295300/0	Nut			
31	1	112521350/0	Washer			
32	1	112620300/0	Spring			
33	1	127160060/0	Extension column			
34	1	325785419/0	Steering Wheel Support			
35	1	127840055/0	Tie Rod			
36	1	112540260/0	Washer			
37	1	112523070/0	Washer			
38	1	325961220/0	Steering Wheel			
40	1	325580504/0	Steering Plate Cover			
52	2	184044007/0	Rimm			
53	4	125122200/2	Bearing			
54	2	127590050/0	Tyre	To 31-August-2016		
54	2	127590067/0	Tyre	From 01-September-2016		
55	2	125670005/1	Washer	To 31-August-2014		
55	2	125670005/2	Washer	From 01-September-2014		
56	2	112001000/0	Benzing Ring	To 31-April-2018		
56	2	112001010/0	Benzing Ring	From 01-May-2018		
57	2	322110233/0	Hub Cover			
58	2	125950000/0	Valve			
59	2	384680069/0	Wheel assy			
60	1	384180219/0	Outfit, Screws			
61	1	384840051/0	Spindle Link Tie-Rod Ass.Y			

KEES VAN DER SPEK
TUINMACHINES STOLWIJK

Copyright ST. S.P.A.

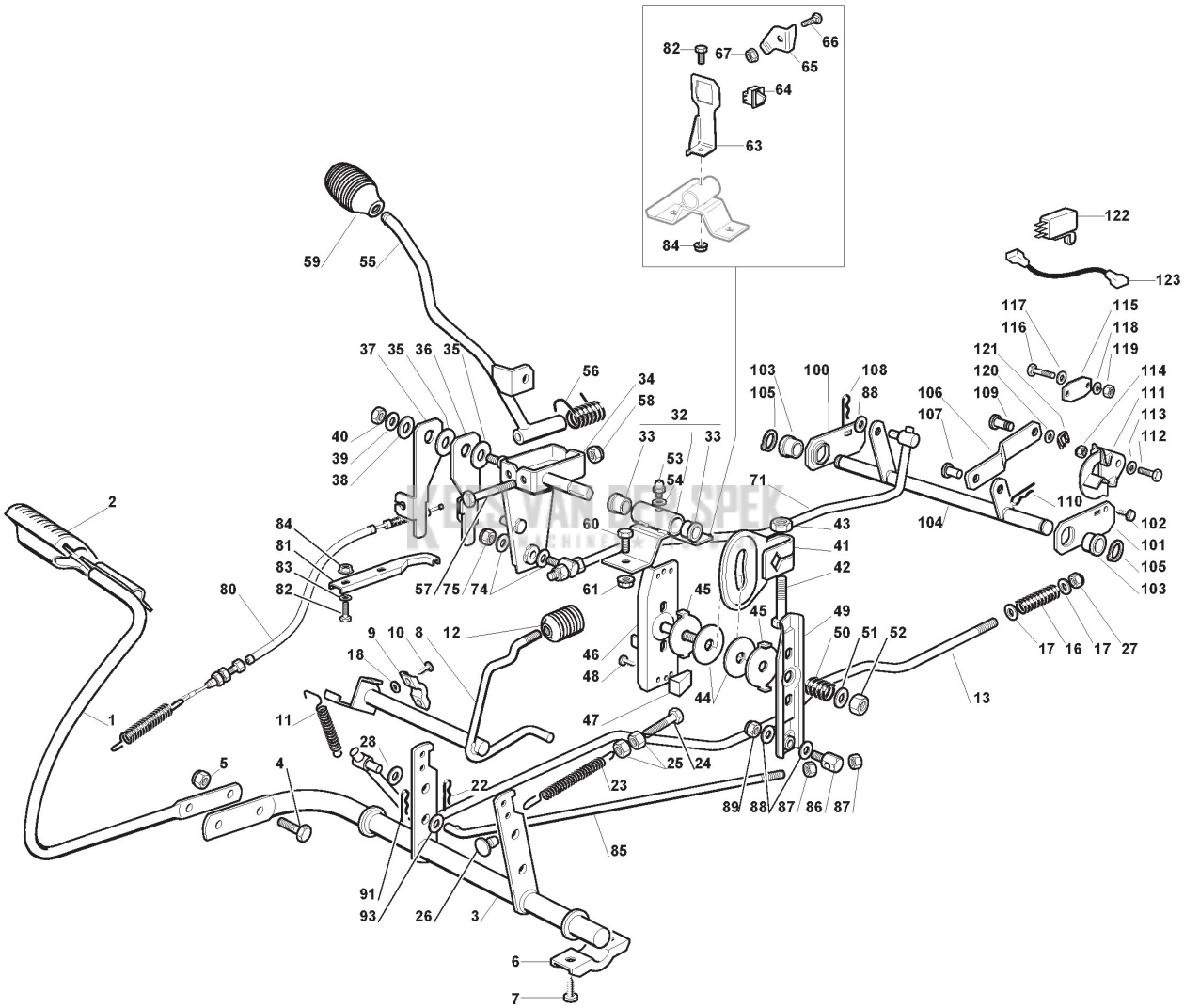

Copyright ST. S.P.A.

Ref.nr.	Qty	Item number	Description	Notes	From	Up to
1	1	384503001/0	Pedal			
2	1	125110267/0	Clamp Cover			
3	1	384001015/1	Axle			
4	2	112793301/0	Screw			
5	2	112155000/0	Nut			
6	2	327546015/2	Plate			
7	4	112731350/0	Screw			
8	1	384001011/2	Axle	To 31-January-2019		
8	1	384001011/3	Axle	From 01-February-2019		
9	2	325547049/0	Plate			
10	4	112731601/0	Screw			
11	1	127430552/0	Spring			
12	1	127395050/1	Knob			
13	1	384002088/0	Rod			
16	1	127430588/0	Spring			
17	2	112521360/0	Washer			
18	4	112521320/0	Washer			
22	1	124487997/0	Cotter Pin			
23	1	125430210/1	Brake Spring			
24	1	122943005/0	Screw			
25	2	112293200/0	Nut			
26	1	127275000/0	Grommet			
27	1	112156602/0	Nut			
28	1	325670011/0	Antifriction Washer			
32	1	384773568/1	Lever	To 31-January-2019		
32	1	384773568/2	Lever	From 01-February-2019		
33	2	127045080/0	Bushing			
34	1	384773561/0	Lever	To 31-August-2018		
34	1	384773561/1	Lever	From 01-September-2018		
35	2	322672151/0	Antifriction Washer			
36	1	327772101/0	Clamp			
37	1	327772103/0	Clamp			
38	1	322672152/0	Antifriction Washer			
39	1	112523060/0	Washer			
40	1	112155010/0	Nut			
41	1	327734055/0	Sector			
42	1	112794900/0	Screw			
43	1	112155020/0	Nut			
44	2	127158000/0	Plate			
45	2	327670053/0	Washer			
46	1	384773565/0	Clamp			
47	2	127063020/0	Cam			
48	2	112735110/0	Screw			
49	1	384773563/0	Lever			
50	1	127430560/0	Clutch Spring			
51	1	325670008/1	Washer			
52	1	112155020/0	Nut			
53	1	112379511/0	Grease Dispenser			

KEES VAN DER SPEK TUINMACHINES

Copyright ST. S.P.A.

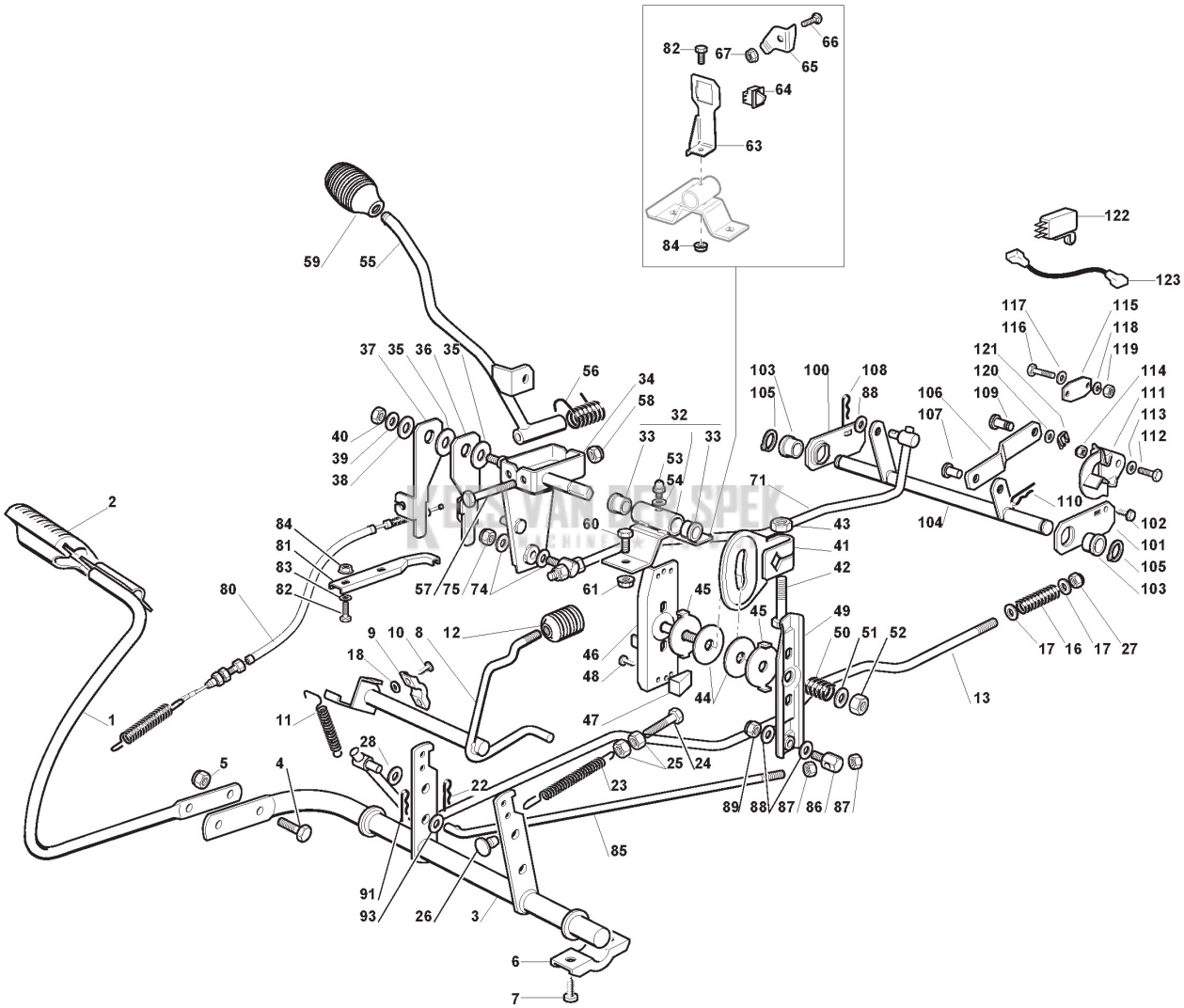

Copyright ST. S.P.A.

Ref.nr.	Qty	Item number	Description	Notes	From	Up to
54	1	112521331/0	Washer			
55	1	384317101/0	Lever, Speed Drive Control			
56	1	125430226/0	Spring			
57	1	112692050/0	Screw			
58	1	112155000/0	Nut			
59	1	182394508/0	Knob			
60	2	112793102/0	Screw			
61	2	112155000/0	Nut			
63	1	327787111/0	Micro Switch Bracket			
64	1	119410614/0	Microswitch	To 31-August-2019		
64	1	119410623/0	Microswitch	From 01-September-2019		
65	1	327063025/0	Micro Switch Bracket			
66	2	112792611/0	Screw			
67	2	112293201/0	Nut			
71	1	384002092/0	Rod			
74	2	325670011/0	Antifriction Washer			
75	1	112155010/0	Nut			
80	1	184207101/1	Clutch Lever Wire			
81	1	327772105/0	Stirrup			
82	4	112791400/0	Screw			
83	2	112521331/0	Washer			
84	4	112292102/0	Nut			
85	1	127034074/0	Rod			
86	1	125510040/1	Pin	To 31-August-2013		
86	1	125510040/2	Pin	From 01-September-2013 To 31-August-2019		
86	1	125510168/0	Pin	From 01-September-2019		
87	2	112293200/0	Nut			
88	3	325670011/0	Antifriction Washer			
89	1	112155010/0	Nut			
91	1	124487997/0	Cotter Pin			
93	2	325670011/0	Antifriction Washer			
100	1	327546059/0	Plate			
101	1	327546061/0	Plate			
102	2	112735120/0	Screw			
103	2	125040614/0	Bushing			
104	1	384001029/0	Axle			
105	2	112608900/0	Seeger			
106	1	327034089/0	Rod			
107	1	127510111/0	Pin			
108	1	124487997/0	Cotter Pin			
109	1	125510085/0	Pin	To 31-August-2015		
109	1	125510085/1	Pin	From 01-September-2015		
110	1	124487997/0	Cotter Pin			
111	1	327063023/0	Cam			
112	1	112793102/0	Screw			
113	1	112521331/0	Washer			
114	1	112155000/0	Nut			
115	1	327546019/0	Neutral Switch Fixing Plate			

KEES VAN DER STEK TUINMACHINES

Copyright ST. S.P.A.

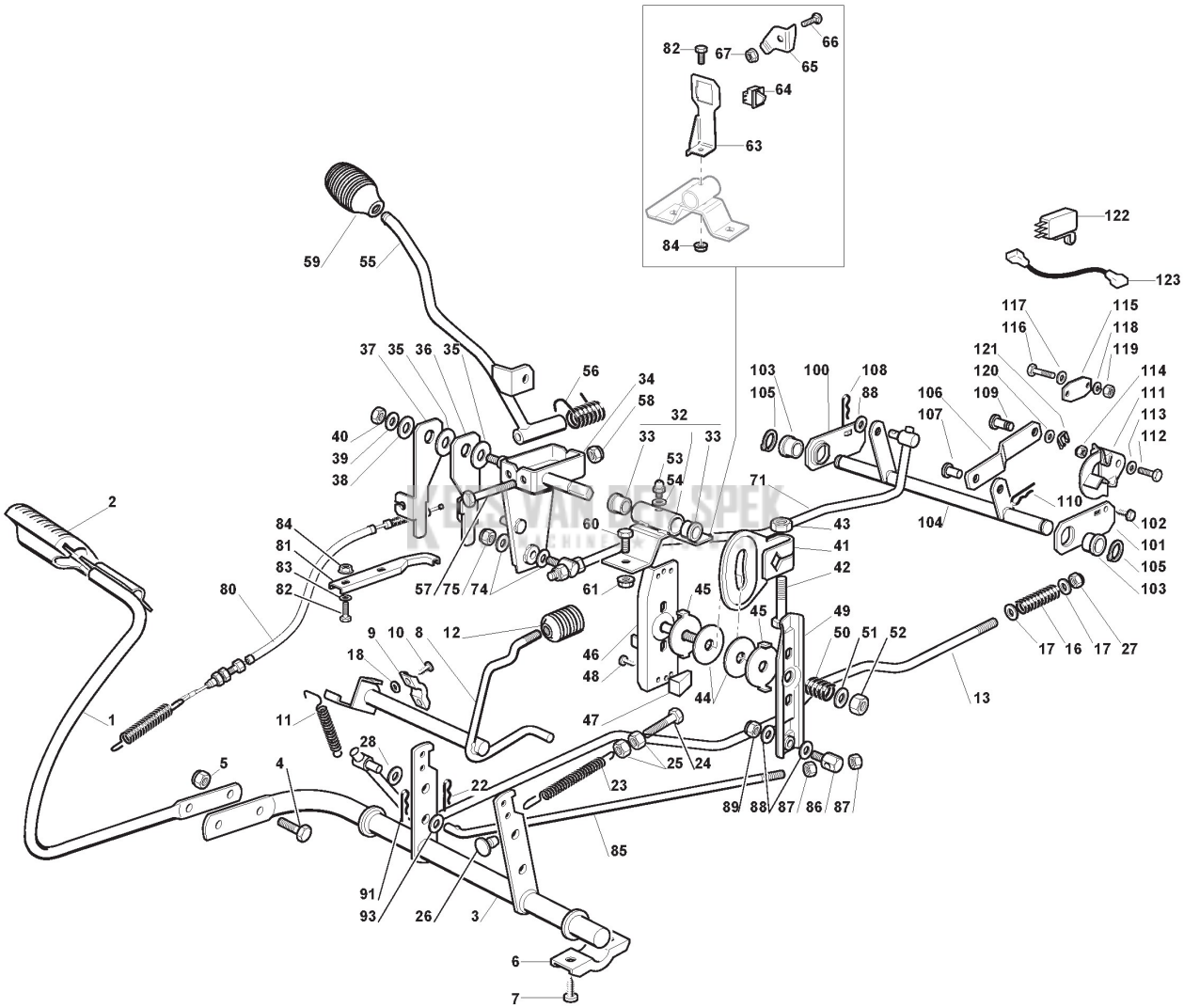

Copyright ST. S.P.A.

Ref.nr.	Qty	Item number	Description	Notes	From	Up to
116	2	112735602/0	Screw			
117	2	112540020/0	Washer			
118	2	112581100/0	Grower			
119	2	112290791/0	Nut			
120	1	112521350/0	Washer			
121	1	112436050/0	Plate			
122	1	119410609/1LC	Micro Switch			
123	1	125065025/0	Cable			

KEES VAN DER SPEK
TUINMACHINES STOLWIJK

Copyright ST. S.P.A.

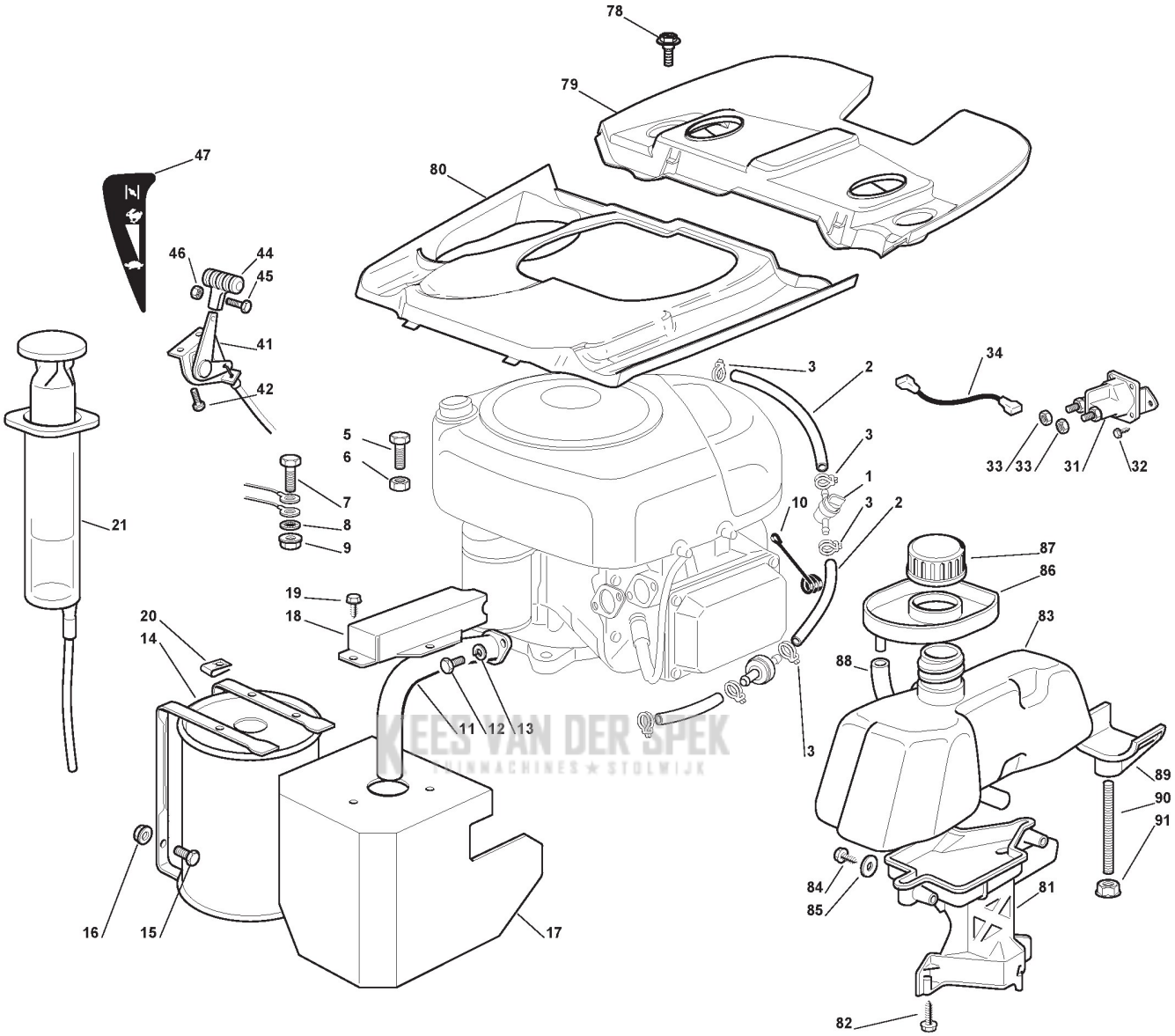

Copyright ST. S.P.A.

Ref.nr.	Qty	Item number	Description	Notes	From	Up to
1	1	118562996/0	Shut out valve			
2	2	325869035/1	Connecting Tube			
3	4	118375051/1	Fair Led			
5	3	112691100/0	Screw			
6	3	112154210/0	Nut			
7	1	112691115/0	Screw			
8	1	112540260/0	Washer			
9	1	112154210/0	Nut			
10	1	125430239/1	Spring			
11	1	118738225/0	Exhaust Connecting Pipe F72 B&S 13			
12	2	112737450/0	Screw			
13	2	112583500/0	Grower			
14	1	182750006/1	Muffler	To 31-August-2013		
14	1	382750006/2	Muffler Imasaf	From 01-September-2013 To 31-August-2016		
14	1	384750059/0	Muffler Imasaf	From 01-September-2016		
15	2	112793102/0	Screw			
16	2	112154210/0	Nut			
17	1	384598081/0	Muffler Protection	To 31-August-2016		
17	1	384598081/1	Muffler Protection	From 01-September-2016		
18	1	327600137/0	Protection	To 31-August-2016		
18	1	327600137/1	Protection	From 01-September-2016		
19	3	112729601/1	Screw			
20	3	112437504/0	Plate			
21	1	118718000/0	Oil Emptying Syringe			
31	1	118736110/0	Starter Relay	To 31-August-2015		
31	1	118736113/0	Starter Relay	From 01-September-2015		
32	2	112735110/0	Screw			
33	2	112360352/0	Nut	To 31-August-2015		
33	2	112361005/0	Nut	From 01-September-2015		
34	1	127065050/0	Cable			
41	1	184000250/1	Accelerator			
42	2	125943012/0	Screw			
44	1	125394501/0	Knob			
45	1	112726389/0	Screw			
46	1	112290800/0	Nut			
47	1	114363697/0	Label			
78	2	125943010/0	Screw			
79	1	327110515/0	Black Seat Switch Cover			
80	1	327110506/0	Engine Cover	To 31-August-2016		
80	1	327110506/1	Engine Cover	From 01-September-2016		
81	1	327787062/0	Support			
82	3	112735410/0	Screw			
83	1	127733003/1	Fuel Tank			
84	2	112735410/0	Screw			
85	2	112523040/0	Washer			
86	1	327600061/2	Guard			
87	1	125795000/1	Fuel Cap			

KEES VAN DER SPEK TUINMACHINES STOLWIJK

Copyright ST. S.P.A.

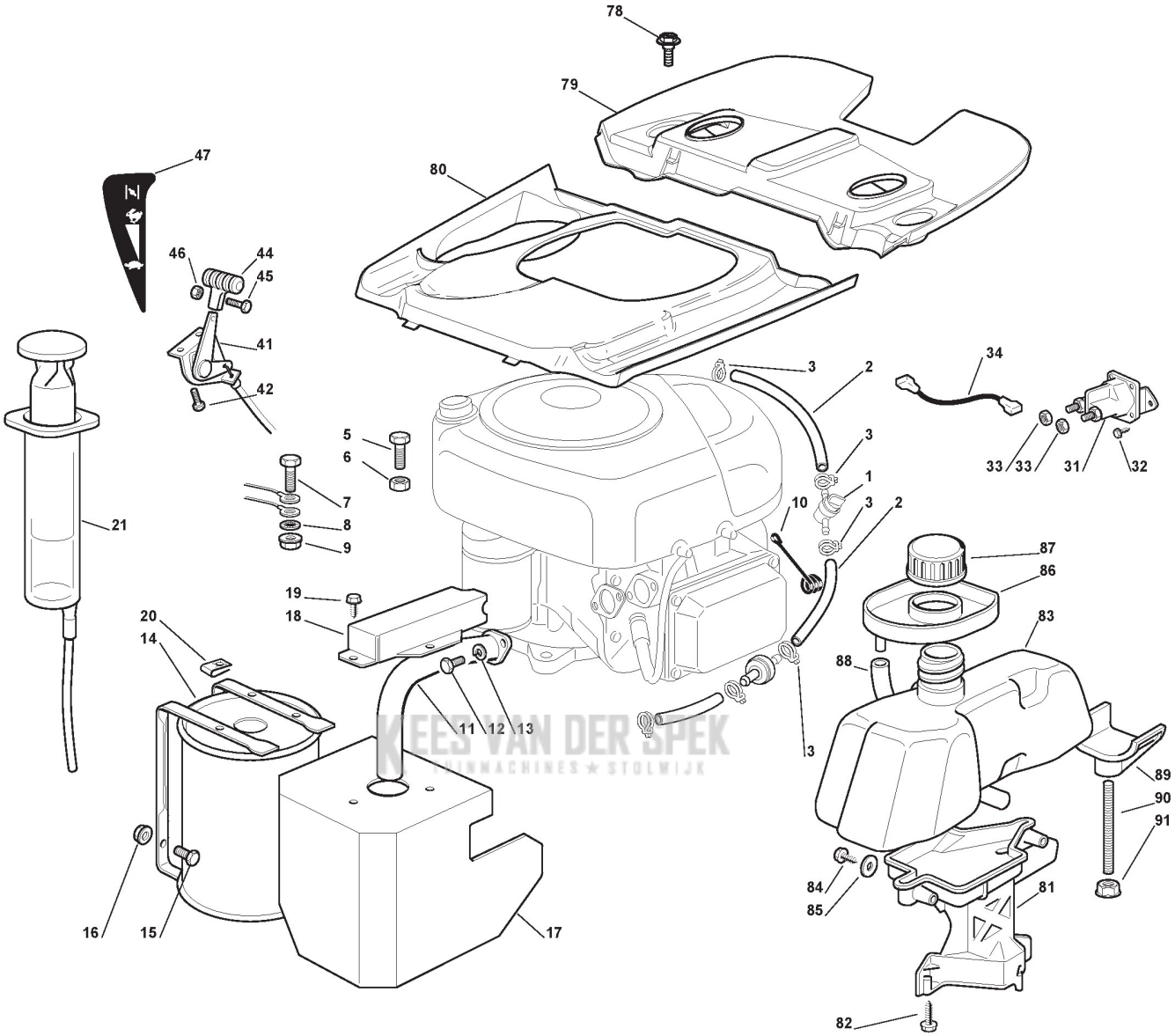

Copyright ST. S.P.A.

Ref.nr.	Qty	Item number	Description	Notes	From	Up to
88	1	325869014/1	Fuel Tube			
89	1	327787063/0	Support			
90	1	127510118/0	Pin			
91	2	112293201/0	Nut			

KEES VAN DER SPEK
TUINMACHINES STOLWIJK

Copyright ST. S.P.A.

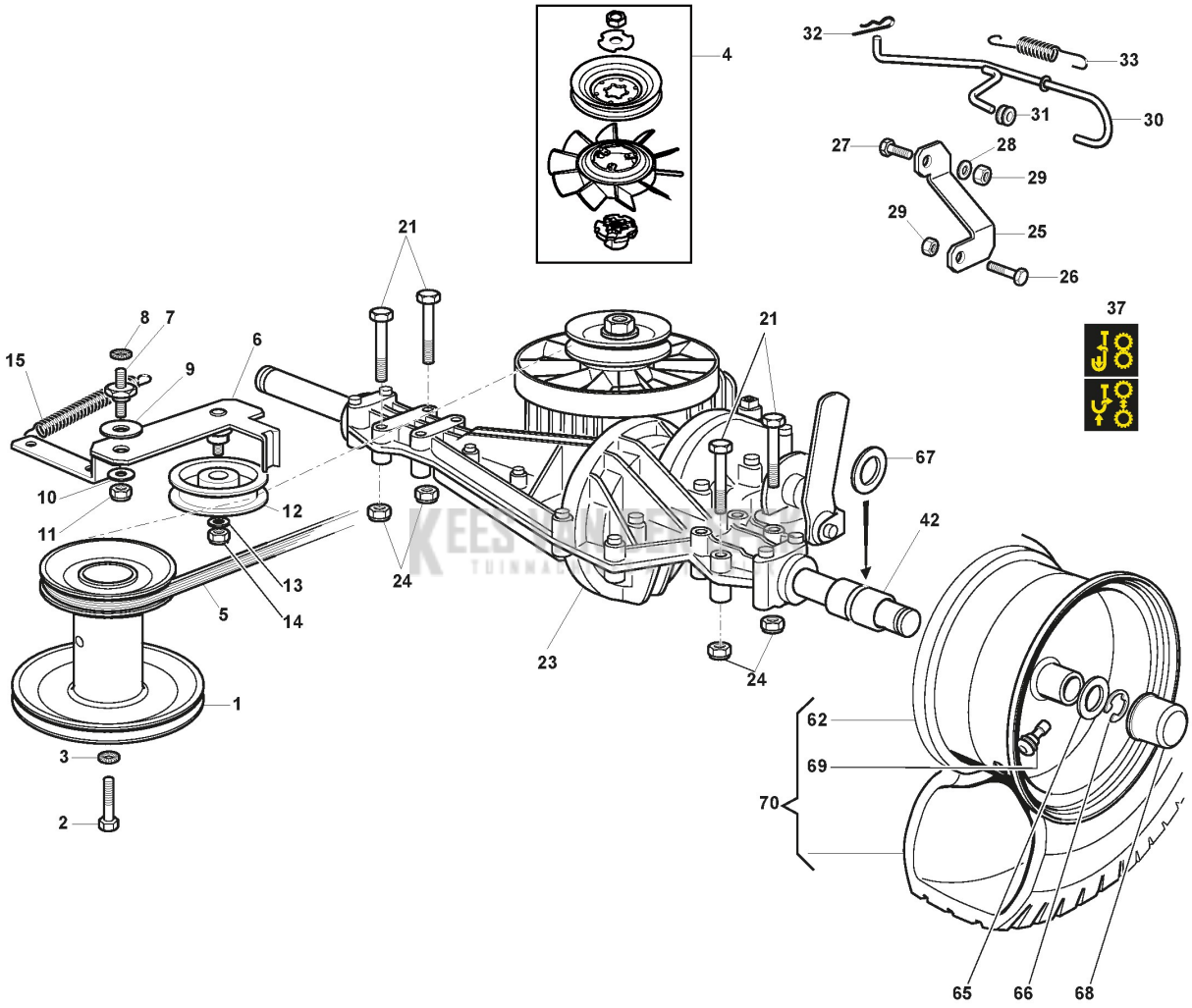

Copyright ST. S.P.A.

Transmission Ass.Y

Ref.nr.	Qty	Item number	Description	Notes	From	Up to
1	1	127604005/0	Pulley			
2	1	112737310/0	Screw			
3	1	112543000/0	Washer			
4	1	1139-2202-01	Fan Kit			
5	1	135061407/1	Belt			
6	1	384317067/1	Lever			
7	1	127510096/0	Fulcrum Pin			
8	1	112540260/0	Washer			
9	1	322672151/0	Antifriction Washer			
10	1	325670011/0	Antifriction Washer			
11	1	112155010/0	Nut			
12	1	125601554/0	Pulley			
13	1	112523060/0	Washer			
14	1	112155000/0	Nut			
15	1	122446402/1	Spring			
21	4	112691900/0	Screw			
23	1	118400976/2	Rear Axle (Hydro-Gear T2-Bdbe-2X1A-16X1)			
24	4	112154210/0	Nut			
25	1	327787075/0	Support			
26	1	112691400/0	Screw			
27	1	112793102/0	Screw			
28	1	112521350/0	Washer			
29	2	112155000/0	Nut			
30	1	384002087/0	Rod			
31	1	118564512/0	Fairlead			
32	1	124487997/0	Cotter Pin			
33	1	125430213/0	Spring			
37	1	114365167/0	Label			
42	2	127160059/0	Spacer			
62	2	184044013/0	Rimm			
65	2	125670005/2	Washer			
66	2	112001010/0	Benzing Ring			
67	2	125670006/0	Washer			
68	2	122110230/0	Hub Cover			
69	2	125950000/0	Valve			
70	2	384680068/0	Wheel assy			

KEES VAN DER SPEK TUINMACHINES STOLWIJK

Copyright ST. S.P.A.

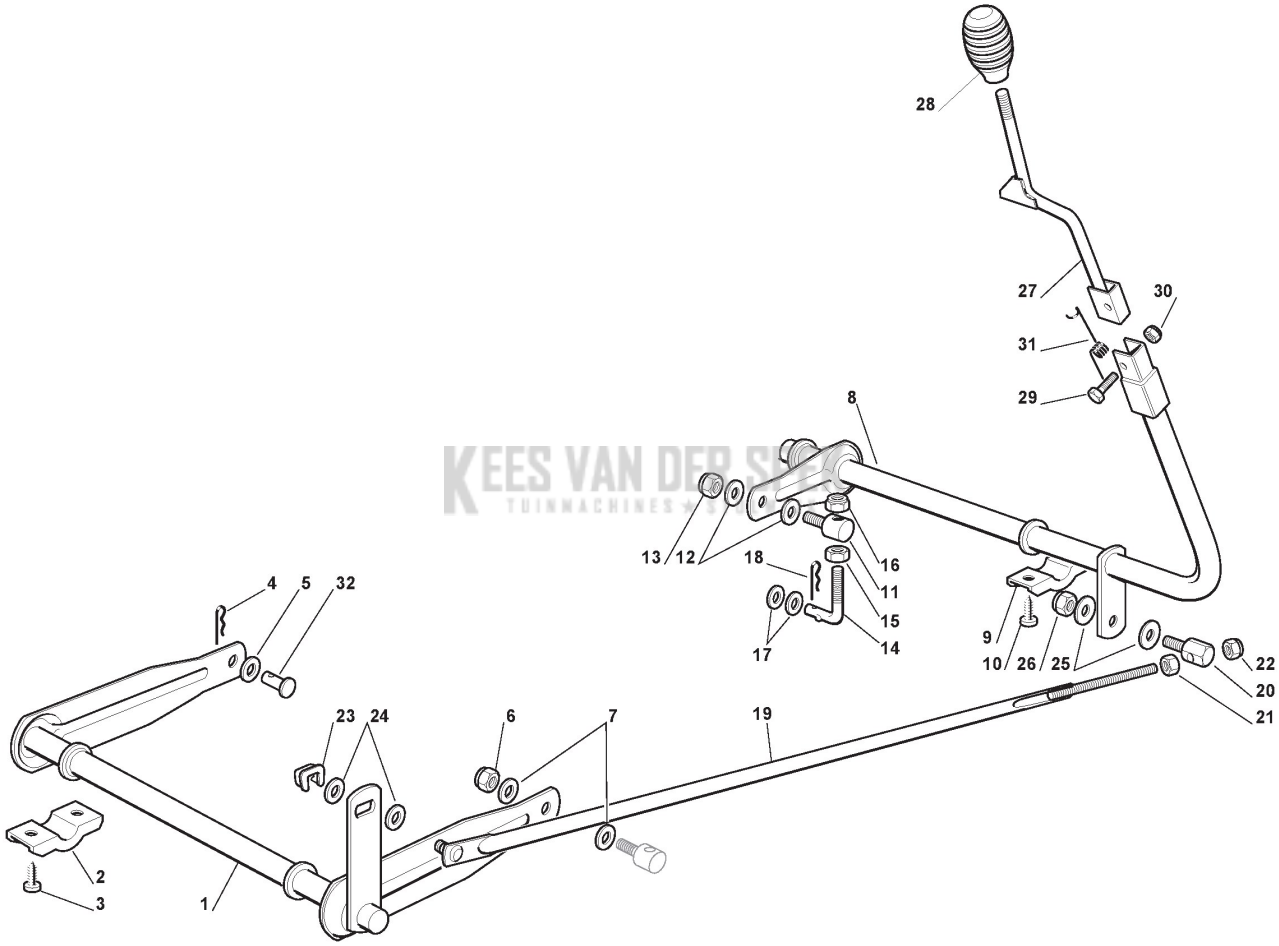

Copyright ST. S.P.A.

Cutting Plate Lifting

Ref.nr.	Qty	Item number	Description	Notes	From	Up to
1	1	384001025/0	Lifting Axle			
2	2	327546015/1	Plate	To 31-August-2012		
2	2	327546015/2	Plate	From 01-September-2012		
3	4	112731350/0	Screw			
4	1	124487997/0	Cotter Pin			
5	1	325670008/1	Washer			
6	1	112156602/0	Nut			
7	2	325670008/1	Washer			
8	1	384001005/1	Axle	To 31-August-2003		
8	1	384001005/2	Lifting Axle	From 01-September-2003		
9	2	327546015/1	Plate	To 31-August-2012		
9	2	327546015/2	Plate	From 01-September-2012		
10	4	112731350/0	Screw			
11	1	125510007/1	Pin	To 31-August-2010		
11	1	125510007/2	Pin	From 01-September-2010		
12	2	325670008/1	Washer			
13	1	112156602/0	Nut			
14	1	125840003/2	Tie Rod			
15	1	112295200/0	Nut			
16	1	112156602/0	Nut			
17	2	322672150/0	Antifriction Washer	From 01-September-2003		
17	2	325670008/1	Washer	To 31-August-2003		
18	1	124487997/0	Cotter Pin			
19	1	184002051/0	Connecting Rod			
20	1	125510040/1	Pin	To 31-August-2013		
20	1	125510040/2	Pin	From 01-September-2013 To 31-August-2019		
20	1	125510168/0	Pin	From 01-September-2019		
21	1	112293200/0	Nut			
22	1	112155000/0	Nut			
23	1	112436050/0	Plate			
24	2	325670011/0	Antifriction Washer			
25	2	325670011/0	Antifriction Washer			
26	1	112155000/0	Nut			
27	1	384317065/1	Lever			
28	1	125394510/0	Knob			
29	1	112674700/0	Screw			
30	1	112154510/0	Nut			
31	1	127430555/0	Spring			
32	1	127510114/0	Pin			

KEES VAN DER SPEK TUINMACHINES

Copyright ST. S.P.A.

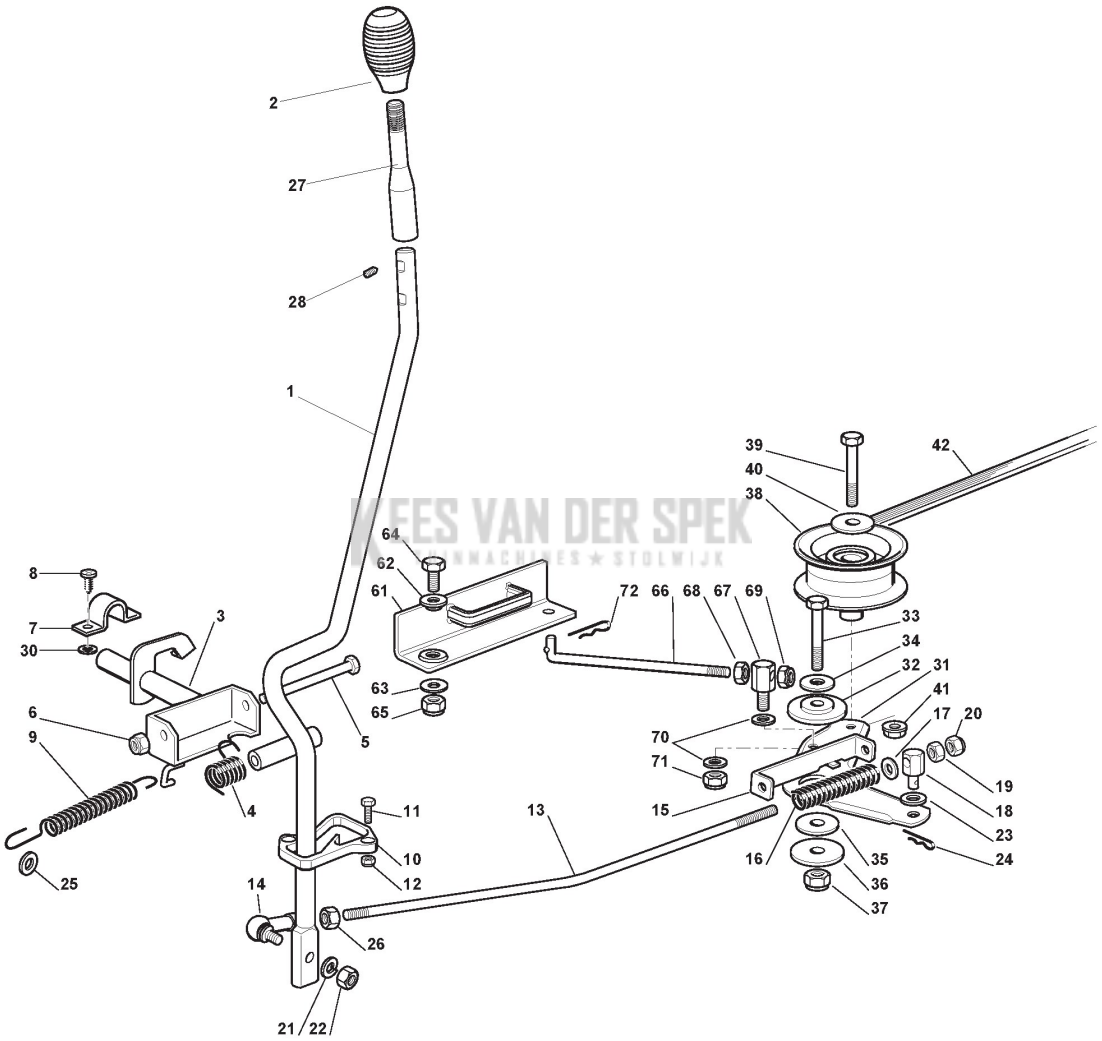

Copyright ST. S.P.A.

Blades Engagement

Ref.nr.	Qty	Item number	Description	Notes	From	Up to
1	1	327315134/0	Blade Engaging Lever			
2	1	125394510/0	Knob			
3	1	384001007/0	Blade Eng.Axle Control Ass.Y			
4	1	125430226/0	Spring			
5	1	112692050/0	Screw			
6	1	112155000/0	Nut			
7	2	325547049/0	Plate			
8	4	112731601/0	Screw			
9	1	127430571/0	Spring			
10	1	127487000/0	Shoe			
11	2	112791213/1	Screw			
12	2	112154510/0	Nut			
13	1	127034078/0	Rod			
14	1	122746601/0	Joint			
15	1	327772143/0	Clamp			
16	1	127430576/0	Spring			
17	1	112521350/0	Washer			
18	1	127510113/0	Pin			
19	1	112293200/0	Nut			
20	1	112155000/0	Nut			
21	1	112583500/0	Grower			
22	1	112293200/0	Nut			
23	1	325670008/1	Washer			
24	1	124487997/0	Cotter Pin			
25	1	125670006/0	Washer			
26	1	112293200/0	Nut			
27	1	384317103/0	Blade Engaging Lever			
28	1	112714250/0	Dowel			
30	2	112521320/0	Washer			
31	1	384317083/0	Lever			
32	1	127047000/0	Bushing			
33	1	112691200/0	Screw			
34	1	112523060/0	Washer			
35	1	322672152/0	Antifriction Washer			
36	1	112523070/0	Washer			
37	1	112155000/0	Nut			
38	1	127604008/0	Pulley			
39	1	112691600/0	Screw			
40	1	112523060/0	Washer			
41	1	112293201/0	Nut			
42	1	135061423/0	Belt	To 31-August-2016		
42	1	135061423/0G	Belt	From 01-September-2016		
61	1	384220501/0	Blade Brake			
62	1	122041980/0	Bushing			
63	1	322672152/0	Antifriction Washer			
64	1	112793102/0	Screw			
65	1	112155010/0	Nut			
66	1	127034077/0	Rod			

KEES VAN DER SPEK TUINMACHINES STOLWIJK

Copyright ST. S.P.A.

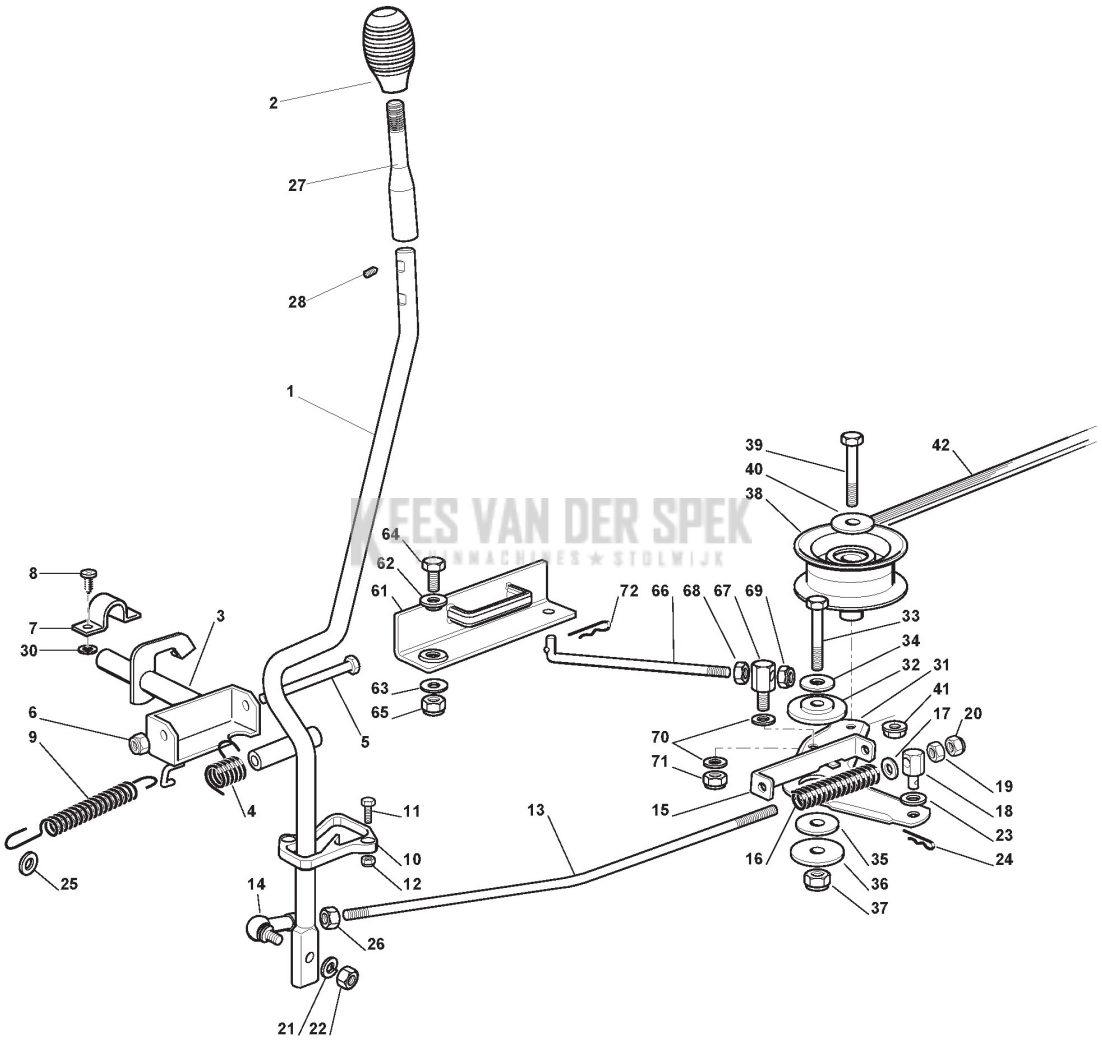

Copyright ST. S.P.A.

Ref.nr.	Qty	Item number	Description	Notes	From	Up to
67	1	125510040/1	Pin	To 31-August-2013		
67	1	125510040/2	Pin	From 01-September-2013 To 31-August-2019		
67	1	125510168/0	Pin	From 01-September-2019		
68	1	112293200/0	Nut			
69	1	112155000/0	Nut			
70	2	325670011/0	Antifriction Washer			
71	1	112155000/0	Nut			
72	1	124487997/0	Cotter Pin			

KEES VAN DER SPEK
TUINMACHINES STOLWIJK

Copyright ST. S.P.A.

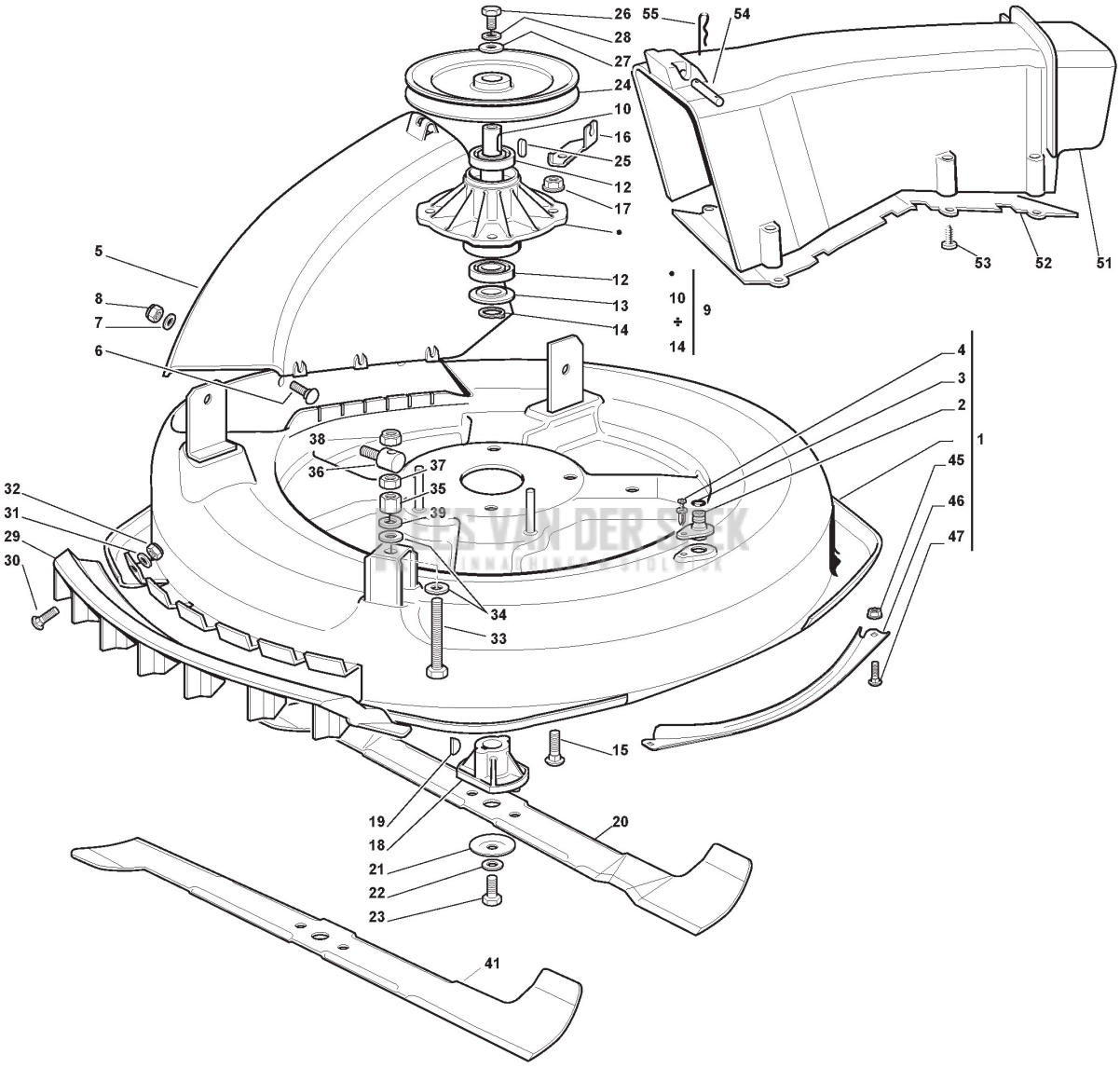

Copyright ST. S.P.A.

Cutting Plate

Ref.nr.	Qty	Item number	Description	Notes	From	Up to
1	1	384564118/0	Cutting Plate Grey			
2	1	125033060/0	Washing Cutting Deck Connection			
3	1	119035000/0	Or Ring			
4	1	112500030/0	Rivet			
5	1	327045000/1	Conveyor Inlet			
6	6	112815210/0	Screw			
7	6	112523040/0	Washer			
8	6	112154510/0	Nut			
9	1	384207250/0	Flange Assy			
10	1	127023000/0	Shaft			
12	2	119216047/0	Bearing			
13	1	325160501/0	Dust Cover Disc	To 31-december-2018		
13	1	325160501/1	Dust Cover Disc	From 01-January-2019		
14	1	112609260/0	Seeger			
15	4	112818700/0	Screw			
16	1	327787067/0	Support	Not for B&S Engine		
17	4	112154210/0	Nut			
18	1	1134-9159-01	Blade Holder	with STIGA Pack		
18	1	125463200/0	Blade Hub	without Pack		
19	1	112139100/0	Key			
21	1	122160400/0	Elastic Disc			
22	1	112523080/0	Washer			
23	1	112735694/0	Screw			
24	1	127604009/0	Pulley			
25	1	112139480/0	Feather			
26	1	112793102/0	Screw			
27	1	125670007/0	Washer			
28	1	112583500/0	Grower			
29	1	127488000/0	Air Intake Grill			
30	4	112815200/0	Screw			
31	4	112521340/0	Washer			
32	4	112154510/0	Nut			
33	1	112794970/0	Screw			
34	2	112523080/0	Washer			
35	1	112154250/0	Nut			
36	1	125510007/2	Pin			
37	1	112295200/0	Nut			
38	1	112156602/0	Nut			
39	1	112585100/0	Washer			
41	1	184109502/0	Winged Blade			
45	4	112154510/0	Nut			
46	1	327543057/0	Deck Profile, Grey			
47	4	112815210/0	Screw			
51	1	127107501/0	Conveyor			
52	1	327140051/1	Deflector			
53	8	112735403/0	Screw			
54	1	127510097/1	Pin			
55	2	124487997/0	Cotter Pin			

KEES VAN DER SPEK TUINMACHINES STOLWIJK

Copyright ST. S.P.A.

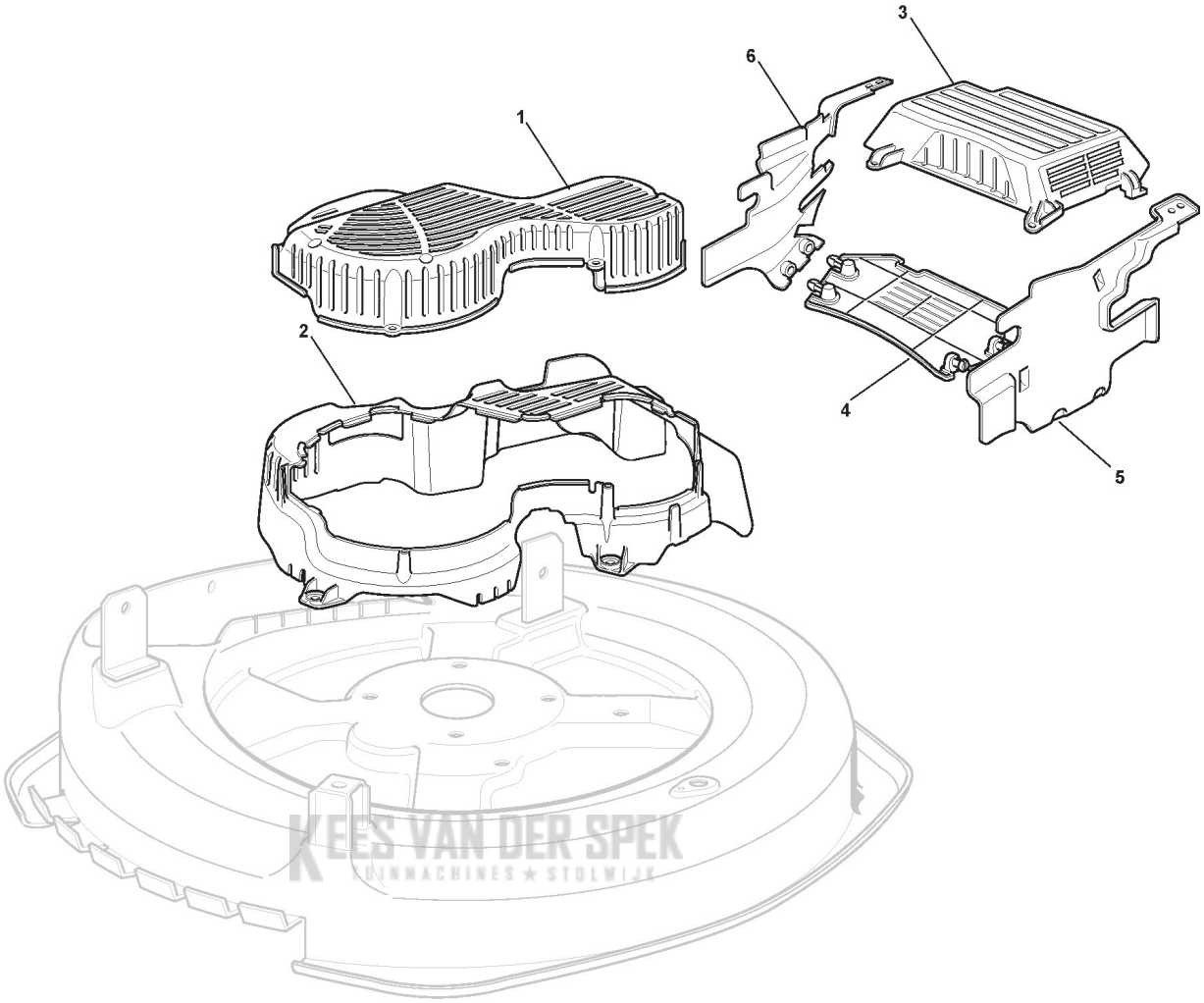

KEES VAN DER SPEK
TUINMACHINES ★ STOLWIJK

Copyright ST. S.P.A.

Cutting Plate

Ref.nr.	Qty	Item number	Description	Notes	From	Up to
1	1	325060136/0	Belt Protection			
2	1	325060137/0	Belt Protection			
3	1	325060138/0	Protection			
4	1	325060141/0	Left Belt Protection			
5	1	325060140/0	Protection			
6	1	325060139/0	Right Belt Protection Carter			

KEES VAN DER SPEK
TUINMACHINES STOLWIJK

Copyright ST. S.P.A.

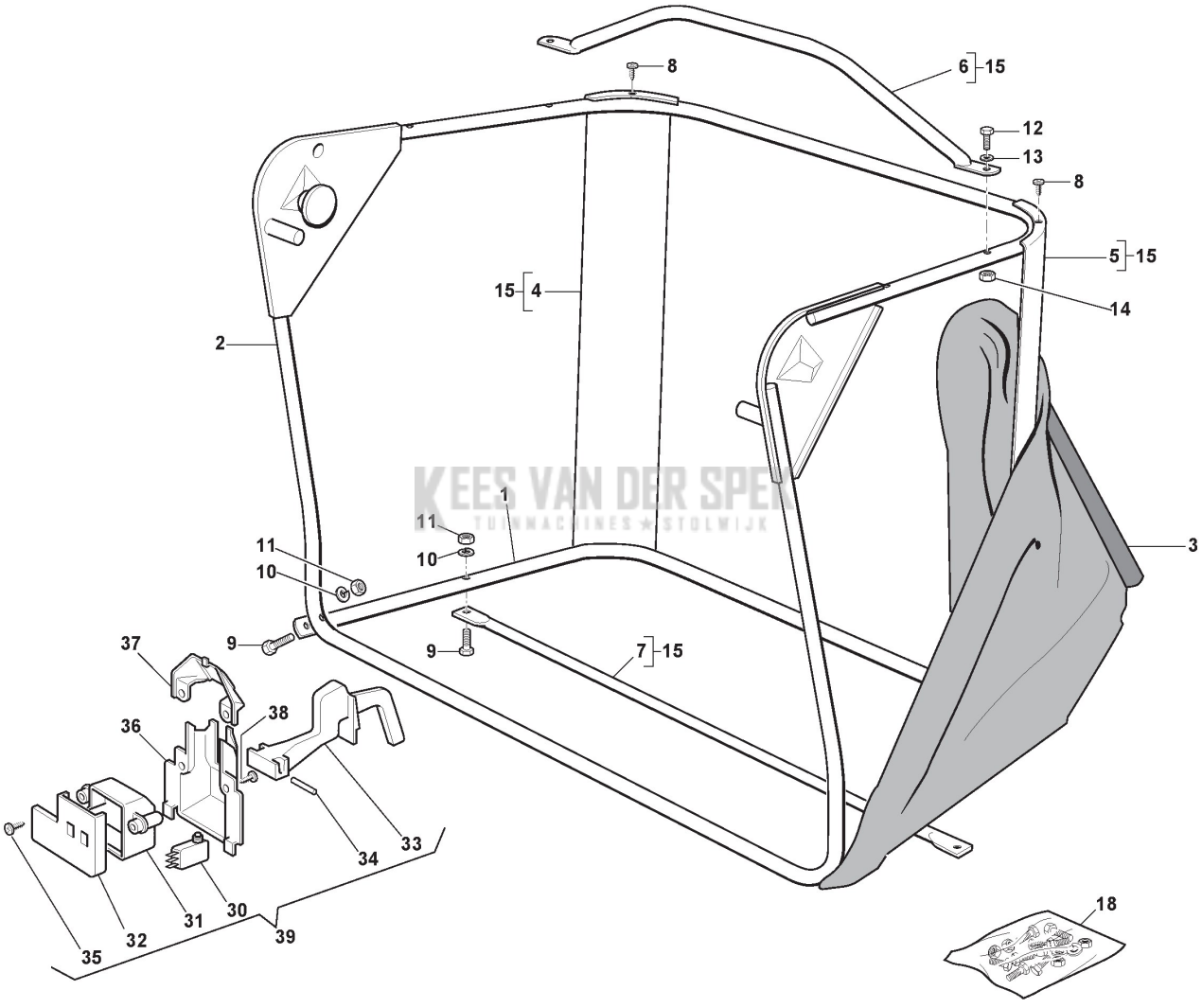

Copyright ST. S.P.A.

Grasscatcher

Ref.nr.	Qty	Item number	Description	Notes	From	Up to
1	1	384801103/0	Lower Frame			
2	1	384801105/1	Black Upper Grass.Frame			
3	1	184106069/0	Grasscatcher			
4	1	327010205/0	Right Angular Support			
5	1	327010207/0	Left Angular Support			
6	1	384869051/0	Rod			
7	1	384650100/0	Stiffening			
8	4	112729601/1	Screw			
9	4	112792099/0	Screw			
10	4	112582101/0	Grower			
11	4	112292100/0	Nut			
12	2	112674701/0	Screw			
13	2	112521331/0	Washer			
14	2	112154510/0	Nut			
15	1	384106051/0	Angular Support Outfit			
18	1	384180180/0	Outfit, Screws			
30	1	119410605/1	Microswitch			
31	1	125600041/0	Grassc.Full Micro Protection Tcj-F			
32	1	125600042/0	Grasscatcher Micro Prot Cover			
33	1	125318124/0	Full Grassc. Microswtich Cover			
34	1	112400030/0	Pin			
35	1	112728510/0	Screw			
36	1	125600047/0	Grassc.Full Micro Protection Tc 2000			
37	1	125600048/0	Empty Micro Grassc.Protection Cover			
38	2	112728450/0	Screw			
39	1	182394703/0LC	Micrograsscatch Ass.Y			

KEES VAN DER SPEK
TUINMACHINES & STOELWIJK

Copyright ST. S.P.A.

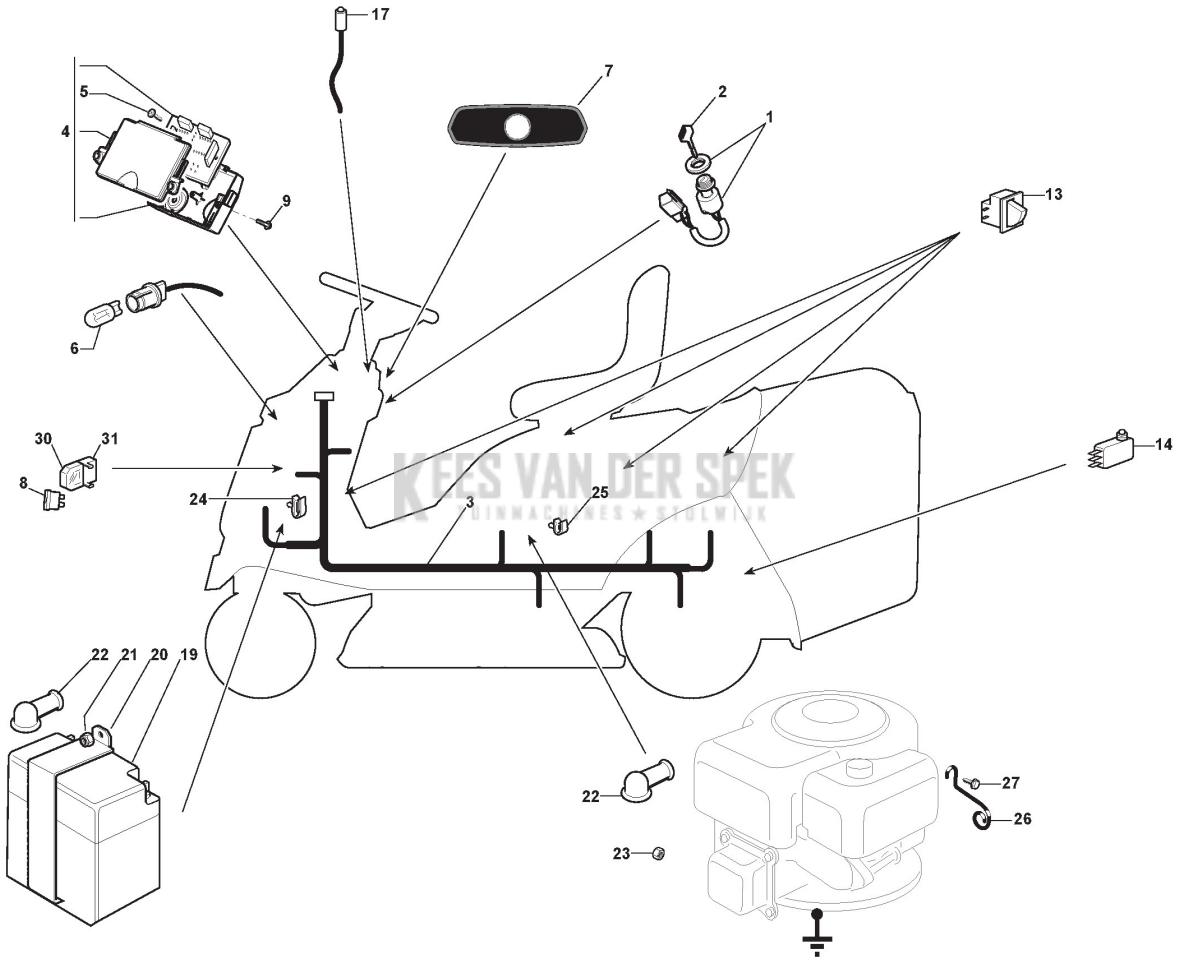

Copyright ST. S.P.A.

Ref.nr.	Qty	Item number	Description	Notes	From	Up to
1	1	118450075/1	Starting Switch			
2	1	118210023/0	Starting Key			
3	1	184040131/0	Cables Ass.Y	To 31-August-2014		
3	1	184040137/0	Cables Ass.Y	From 01-September-2014 To 31-August-2015		
3	1	184040137/1	Cables Ass.Y	From 01-September-2015 To 31-August-2018		
3	1	184040137/2	Cables Ass.Y	From 01-September-2018		
4	1	384722479/0	Electronic Card	To 31-August-2014		
4	1	384722487/0	Electronic Card	From 01-September-2014		
5	1	112735101/0	Screw	To 31-August-2015		
5	1	112735105/0	Screw	From 01-September-2015		
6	1	118459100/0	Lamp For Lights			
7	1	125420022/0	Check Control			
8	1	133340035/0	Fuse 15 A			
8	1	133340040/0	Fuse 10 A			
9	2	112735406/0	Screw			
13	4	119410613/0	Microswitch	To 31-August-2019		
13	1	119410622/1	Microswitch	From 01-September-2019		
14	1	119410605/1	Microswitch			
17	1	125065014/1	Card Allarm Signal Cable			
19	1	118120002/1	Battery	To 31-August-2016		
19	1	118120007/0	Battery	From 01-September-2016		
20	1	327772099/1	Clamp			
21	1	112155000/0	Nut			
22	2	118564861/1	Protection	To 31-August-2017		
22	2	118564861/2	Protection	From 01-September-2017		
23	1	112361005/0	Nut			
24	3	133320506/0	Fairlead			
25	1	133320504/0	Fairlead			
26	1	127430561/0	Spring			
27	1	112735121/0	Screw	To 31-August-2014		
27	1	112735122/0	Screw	From 01-September-2014 To 31-August-2016		
27	1	112735122/1	Screw	From 01-September-2016		
30	2	133215000/0	Cover			
31	2	133500007/0	Fuse Carrier			

KEES VAN DER SPEK TUINMACHINES

Copyright ST. S.P.A.

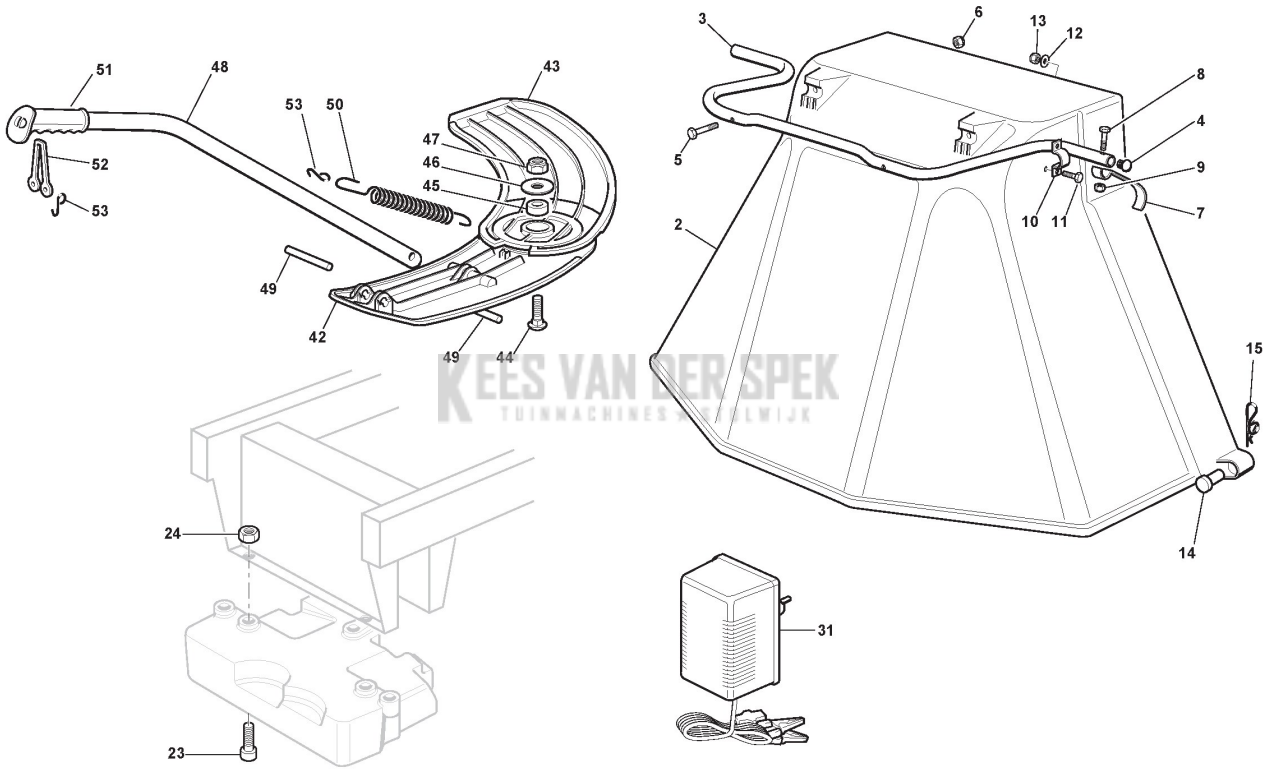

Copyright ST. S.P.A.

Optionals On Request

Ref.nr.	Qty	Item number	Description	Notes	From	Up to
2	1	484598062/0	Ejection Guard			
3	1	327869053/0	Support			
4	2	118566113/0	Cap			
5	2	112674701/0	Screw			
6	2	112154510/0	Nut			
7	1	325547053/0	Plate			
8	1	112791500/0	Screw			
9	1	112154510/0	Nut			
10	2	325547049/0	Plate			
11	4	112788910/0	Screw			
12	4	112523020/0	Washer			
13	4	112154320/0	Nut			
14	2	125510022/0	Pin	To 31-August-2012		
14	1	125510022/1	Pin	From 01-September-2012		
15	2	124487998/0	Cotter Pin			
23	3	112760520/0	Screw			
24	3	112155000/0	Nut			
31	1	182180090/0	Battery Charger 12V 1A - CE Plugg			
31	1	182180091/0	Battery Charger 12V 1A - UK Plugg	BS Plug		
42	1	327140055/0	Deflector, Rear			
43	1	327140054/0	Deflector, Front			
44	1	112818700/0	Screw			
45	1	127047013/0	Bushing	To 31-August-2013		
45	1	127047013/1	Bushing	From 01-September-2013		
46	1	322672152/0	Antifriction Washer			
47	1	112155000/0	Nut			
48	1	327394003/1	Handle	To 31-August-2011		
48	1	327394003/2	Handle	From 01-September-2011		
49	2	127510116/0	Pin			
50	1	125430229/1	Brake Spring			
51	1	325280000/1	Handgrip			
52	1	125840011/0	Elastic Tie-Rod	To 31-August-2011		
52	1	125840011/1	Tie Rod	From 01-September-2011		
53	3	125253004/0	Mulch.Kit Fixing Hook			

KEES VAN DER SPEK TUINMACHINES

Copyright ST. S.P.A.

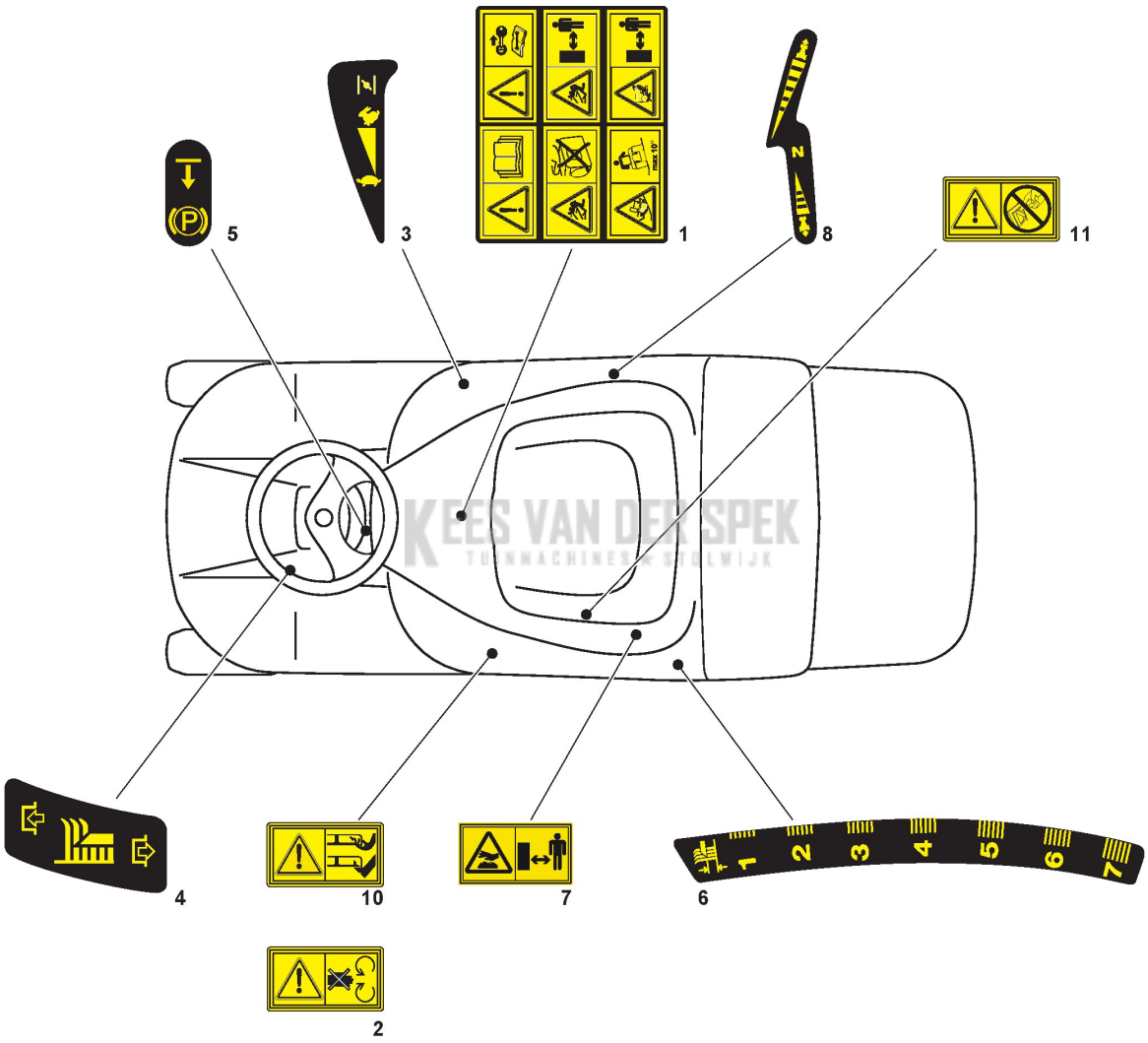

Copyright ST. S.P.A.

Safety Labels

Ref.nr.	Qty	Item number	Description	Notes	From	Up to
1	1	114357428/1	Label			
2	1	114357519/2	Label			
3	1	114363697/0	Label			
4	1	114357431/0	Label	To 31-August-2018		
4	1	114357431/1	Label	From 01-September-2018		
5	1	114357526/1	Label			
6	1	114357427/0	Label	To 31-August-2018		
6	1	114357427/1	Label	From 01-September-2018		
7	1	114364961/3	Label			
8	1	114357702/0	Label	To 31-August-2018		
8	1	114357702/1	Label	From 01-September-2018		
10	2	114356699/1	Label			
11	1	114360118/0	Label	Specific for Honda Models		

KEES VAN DER SPEK
TUINMACHINES STOLWIJK

Copyright ST. S.P.A.

Copyright ST. S.P.A.

Decals

Ref.nr.	Qty	Item number	Description	Notes	From	Up to
1	1	114367725/1	Steering Label			
2	3	114367494/2	Label STIGA logo			
3	2	114368435/0	Label	Combi 3072H		

KEES VAN DER SPEK
TUINMACHINES STOLWIJK

Copyright ST. S.P.A.

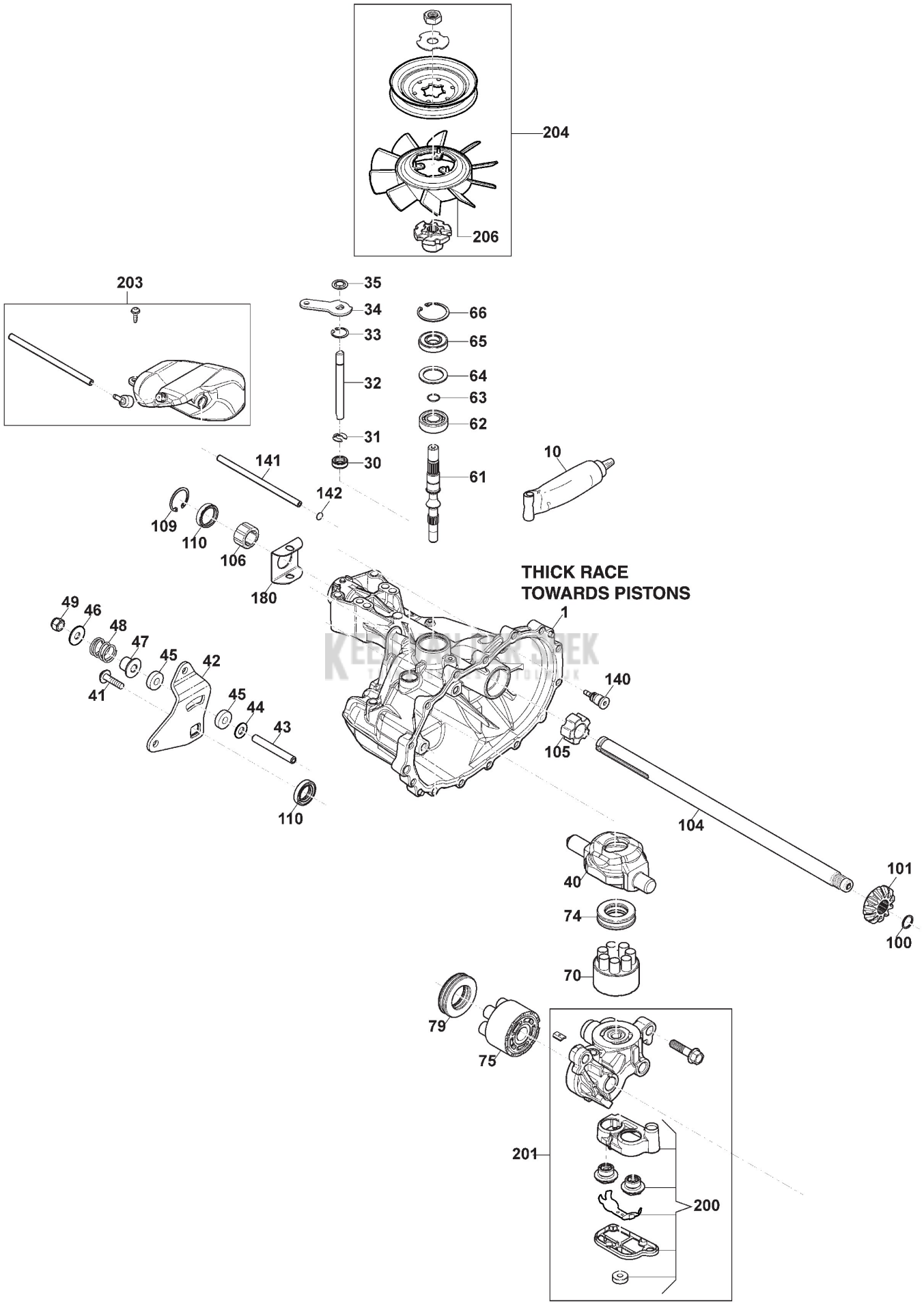

Copyright ST. S.P.A.

Transmission Unit, Hydro-Gear T2-BDBE-2X1A-16X1

Ref.nr.	Qty	Item number	Description	Notes	From	Up to
1	1	118870120/0	Main Housing			
10	1	1139-2022-01	Sealant			
30	1	118870079/0	Seal			
31	1	118870081/0	Retaining ring			
32	1	1139-2203-01	Rod			
33	1	118870080/0	Retaining ring			
34	1	118870091/0	Arm			
35	1	118870082/0	Retaining ring			
40	1	118870090/0	Swashplate			
41	1	118870083/0	Screw			
42	1	118870110/0	Arm			
43	1	118870117/0	Screw			
44	1	118870109/0	Washer			
45	2	118870087/0	Washer			
46	1	1139-2011-01	Flat washer			
47	1	118870118/0	Spacer			
48	1	118870073/0	Spring			
49	1	118870074/0	Nut			
61	1	118870092/0	Shaft			
62	1	1139-2001-01	Ball Bearing			
63	1	1139-2003-01	Wire Retaining Ring			
64	1	1139-2004-01	Spacer			
65	1	1139-2000-01	Lip Seal			
66	1	1139-2002-01	Retaining Ring			
70	1	118870125/0	Pump Block Assy			
74	1	118870093/0	Bearing			
75	1	1139-2063-01	Cylinder Block			
79	1	1139-2021-01	Thrust Bearing			
104	1	118870115/0	Shaft			
140	1	1139-2038-01	Fitting			
141	1	118870102/0	Tube			
142	1	1139-2075-01	O-Ring			
200	1	118870123/0	Kit-Filter			
201	1	118870128/0	Center Section Kit			
203	1	118870122/0	Kit-Expansion Tank			
204	1	1139-2202-01	Fan Kit			
206	1	118870131/0	Fan			

KEES VAN DER SPEK TUINMACHINES STOLWIJK

Copyright ST. S.P.A.

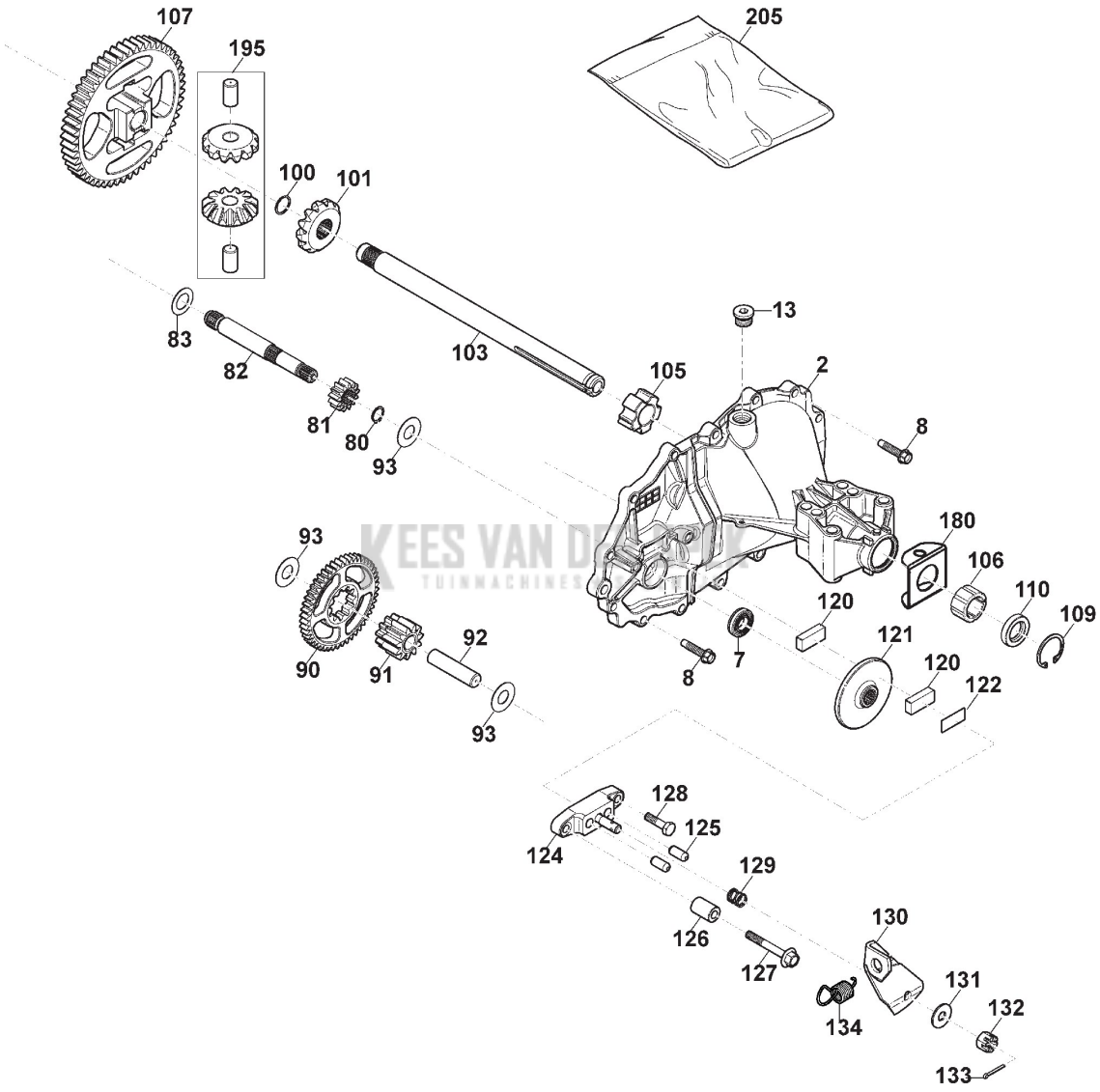

Copyright ST. S.P.A.

Transmission Unit, Hydro-Gear T2-BDBE-2X1A-16X1

Ref.nr.	Qty	Item number	Description	Notes	From	Up to
2	1	118870121/0	Side Housing			
7	1	118870111/0	Seal			
8	14	1139-2042-01	Screw			
13	1	1139-2010-01	Plug			
80	1	118870070/0	Retaining ring			
81	1	118870106/0	Gear			
82	1	118870095/0	Shaft			
83	1	118870096/0	Washer			
90	1	118870105/0	Gear			
91	1	118870098/0	Gear			
92	1	118870099/0	Pin			
93	3	1139-2016-01	Washer			
100	2	118870072/0	Retaining ring			
101	2	118870063/0	Gear			
103	1	118870116/0	Shaft			
105	2	118870086/0	Bushing			
106	2	118870085/0	Bushing			
107	1	118870100/0	Gear			
109	2	118870084/0	Retaining ring			
110	3	1139-2204-01	Shaft			
120	2	118870066/0	Brake Pad			
121	1	118870101/0	Brake			
122	1	118870067/0	Brake Pad Support			
124	1	118870119/0	Brake Caliper			
125	2	118870069/0	Pin			
126	1	118870062/0	Spacer			
127	1	118870077/0	Screw			
128	1	118870071/0	Bolt			
129	1	118870076/0	Spring			
130	1	118870064/0	Brake Lever			
131	1	1139-2011-01	Flat washer			
132	1	118870068/0	Nut			
133	1	118870065/0	Pin			
134	1	118870075/0	Spring			
180	2	118870112/0	Plate			
195	1	118870126/0	Kit-Gears and Pins			
205	1	118870124/0	Kit-Seal			

KEES VAN DER SPEK
TUINMACHINES STOLWIJK

Copyright ST. S.P.A.