DS 2400 S (Euro 2) Brushcutter

Documenten

Engine

Starter assy and clutch

Air filter

Transmission

Accessories

Carburettor

KEES VAN DER SPEK
TUINMACHINES ★ STOLWIJK

Copyright EMAK S.P.A.

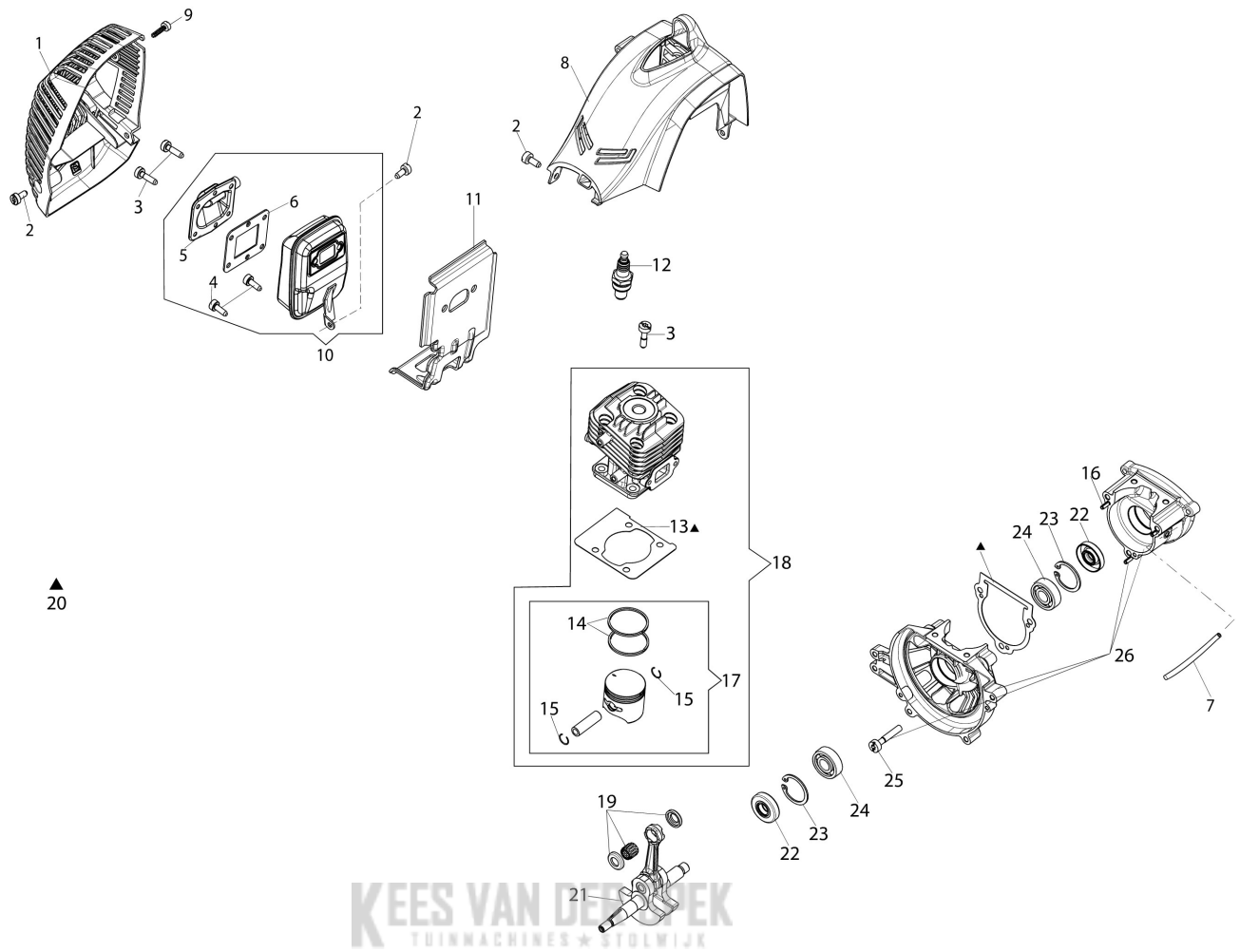

KEES VAN DEN BREK
TUINMACHINES ★ STOLWIJK

Copyright EMAK S.P.A.

Ref.Nu	Qty	Part number	Description	Validity from	Validity till	Notes	Bulletin
1	1	61370302R	Guard			Grigio; Grey	
2	4	3891036R	Screw				
3	6	3891047R	Screw				
4	6	3891009R	Screw				
5	1	58070143R	Cover				
6	1	58070144R	Gasket				
7	1	094600126	Tube				
8	1	61370189R	Cover			Rosso; Red	
9	1	3893060R	Screw				
10	1	61370202AR	Complete muffler				
11	1	61370143R	Deflector				
12	1	3055112	Spark plug				
13	1	58070011R	Gasket				
14	2	3123002AR	Piston ring	SN 9216200001			BT3-129-05/16
15	2	58070166R	Ring				
16	5	61280044R	Plug				
17	1	61370252A	Piston assy Ø32	SN 9216200001			BT3-129-05/16
18	1	61370253B	Complete cylinder Ø32	SN 9216200001			BT3-129-05/16
19	1	61370254	Set roller cage and washer				
20	1	61370255	Gasket set				
21	1	58070045R	Shaft				
22	2	3050042R	Ring				
23	2	3025018R	Ring				
24	2	3034007R	Bearing				
25	3	3891051R	Screw				
26	1	61370085R	Crankcase assy				

KEES VAN DER SPEK
TUINMACHINES ★ STOLWIJK

Copyright EMAK S.P.A.

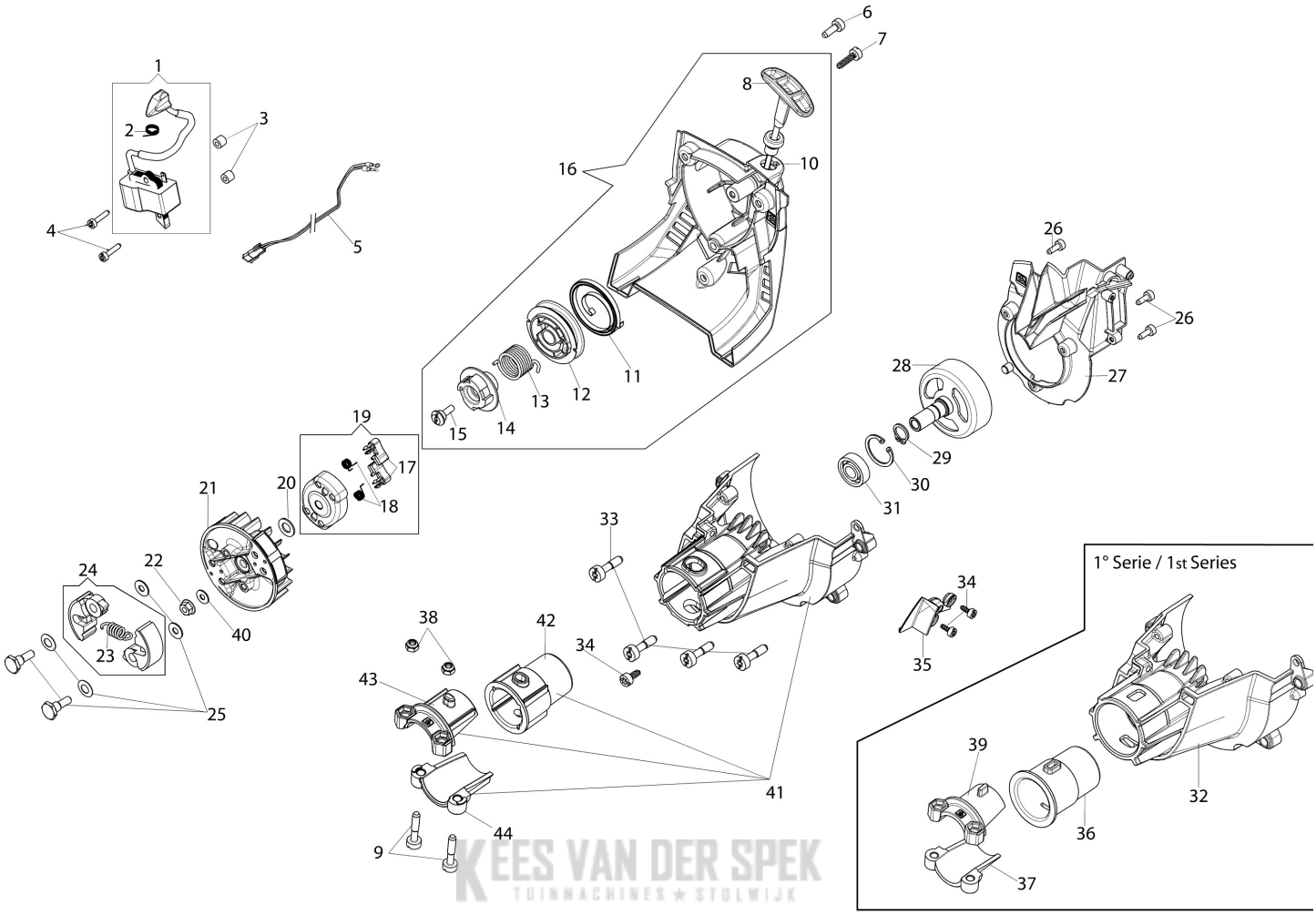

KEES VAN DER SPEK
TUINMACHINES ★ STOLWIJK

Copyright EMAK S.P.A.

Ref.Nu	Qty	Part number	Description	Validity from	Validity till	Notes	Bulletin
1	1	2501002R	Ignition coil				
2	1	50050127	Spring				
3	2	50160218AR	Spacer				
4	2	3891020R	Screw				
5	1	61370059R	Cable				
6	3	3891038R	Screw				
7	1	3893060R	Screw				
8	1	61370082R	Handle				
9	2	3891050R	Screw				
10	1	61370024R	Rope				
11	1	61070036R	Spring				
12	1	61370022AR	Starter pulley				
13	1	61370237R	Spring				
14	1	61370023R	Sprocket				
15	1	50160024	Screw				
16	1	61370231R	Starter assy			Rosso; Red	
17	2	61370014R	Pawl				
18	2	61070039R	Spring				
19	1	61370013R	Clutch driver				
20	1	3064034	Washer				
21	1	58070133R	Flywheel				
22	1	3912014R	Nut				
23	1	61070090R	Spring				
24	1	61070091AR	Clutch				
25	1	61370257	Kit pin + Belleville washer + spacer ring				
26	3	3891009R	Screw				
27	1	61370090R	Flange				
28	1	61170050BR	Clutch drum				
29	1	3024012R	Snap ring				
30	1	3025019	Ring				
31	1	3035023R	Bearing				
32	1	61370556	Starter case set		SN 9216358081		BT3-131-09/16
33	4	3891046R	Screw				
34	3	3893009R	Screw				
35	1	61370091AR	Cover				
36	1	61370030R	Sleeve		SN 9216358081		BT3-131-09/16
37	1	61370028AR	Adaptor		SN 9216358081		BT3-131-09/16
38	2	3914003R	Nut				
39	1	61370029AR	Adaptor		SN 9216358081		BT3-131-09/16
40	1	3819031R	Washer				
41	1	61370556	Starter case set	SN 9216358082			BT3-131-09/16
42	1	61370527R	Sleeve	SN 9216358082			BT3-131-09/16
43	1	61370526R	Adaptor	SN 9216358082			BT3-131-09/16
44	1	61370525R	Adaptor	SN 9216358082			BT3-131-09/16

KEES VAN DER SPEK
TUINMACHINES ★ STOLWIJK

Copyright EMAK S.P.A.

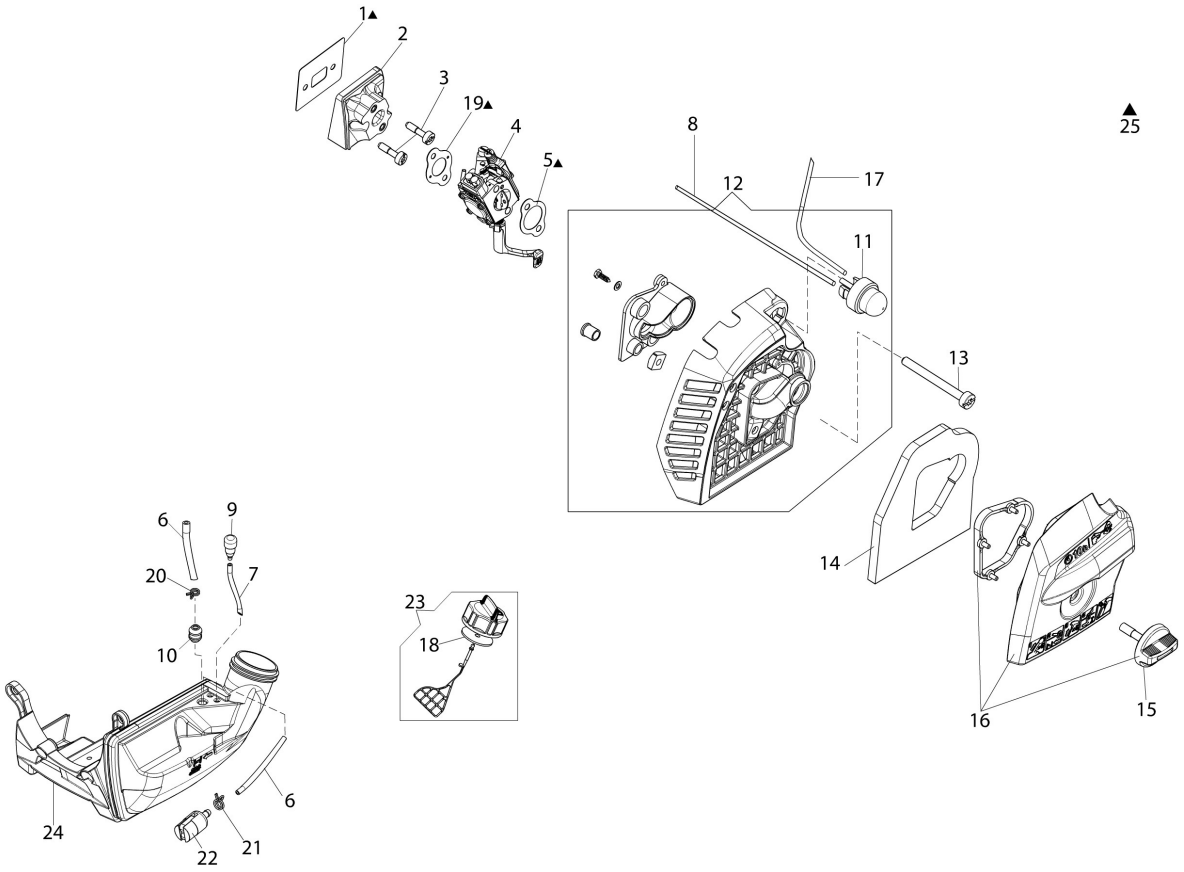

KEES VAN DER SPEK
TUINMACHINES ★ STOLWIJK

Copyright EMAK S.P.A.

Ref.Nu	Qty	Part number	Description	Validity from	Validity till	Notes	Bulletin
1	1	58070025AR	Gasket				
2	1	61370001R	Insulator				
3	2	3891046R	Screw				
4	1	2318265R	Carburetor				
5	1	56570058R	Gasket				
6	1	61370038R	Tube				
7	1	3073001R	Breather fuel pipe				
8	1	61370553R	Tube				
9	1	61070011AR	Breather valve				
10	1	4161211R	Bush				
11	1	2318817R	Air purge				
12	1	61372008AR	Filter support				
13	2	3891063R	Screw				
14	1	61370005R	Air filter				
15	1	61370008R	Knob				
16	1	61370258	Filter cover kit				
17	1	61380112R	Tube				
18	1	61070006R	Gasket				
19	1	61200196AR	Gasket				
20	1	3059026	Band				
21	1	4098377R	Band				
22	1	094600450R	Fuel filter				
23	1	61372003R	Tank cap				
24	1	61370076R	Tank			Rosso; Red	
25	1	61370255	Gasket set				

KEES VAN DER SPEK
TUINMACHINES ★ STOLWIJK

Copyright EMAK S.P.A.

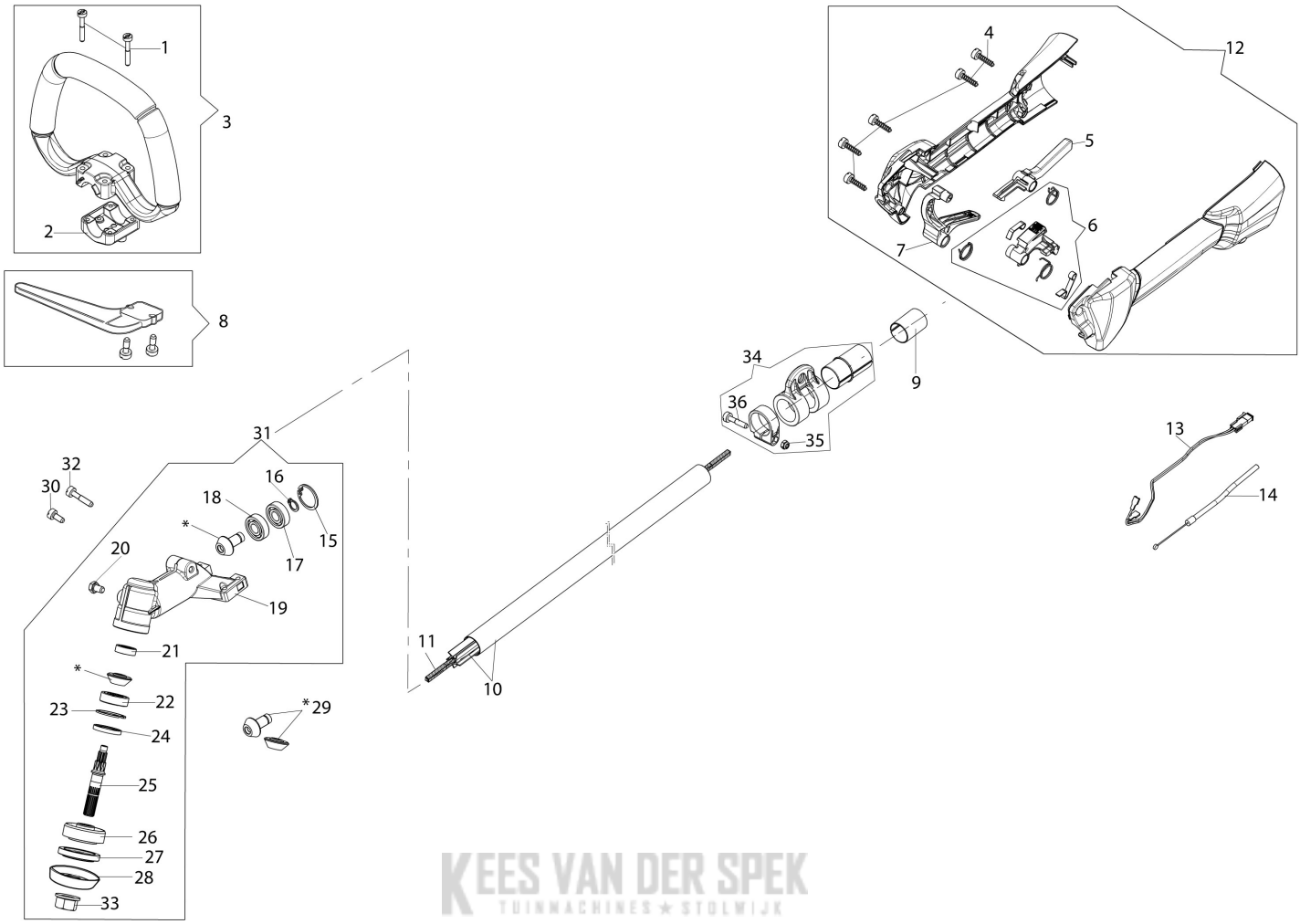

KEES VAN DER SPEK
TUINMACHINES ★ STOLWIJK

Copyright EMAK S.P.A.

Ref.Nu	Qty	Part number	Description	Validity from	Validity till	Notes	Bulletin
1	4	3891054R	Screw				
2	1	61370183R	Clamp				
3	1	61370271	Handle			Grigio; Grey	
4	5	3893060R	Screw				
5	1	61370043R	Lever				
6	1	61370260	Lever group				
7	1	61370044AR	Throttle lever				
8	1	61370269	Guard kit				
9	1	61370198R	Spacer				
10	1	61370045R	Tube Ø24				
11	1	61170075R	Drive shaft				
12	1	61370270	Complete handle			Grigio; Grey	
13	1	61370032AR	Cable	SN 9215473296			BT3-128-03/16
14	1	61370220AR	Throttle cable				
15	1	3025026	Ring				
16	1	3024009R	Ring				
17	1	3035044	Bearing				
18	1	3035043	Bearing				
19	1	61170119AR	Gear case				
20	1	3906030	Screw				
21	1	3035045R	Bearing				
22	1	3034008R	Bearing				
23	1	3025018R	Ring				
24	1	61170134	Seal ring				
25	1	61170122	Shaft				
26	1	61170123	Hub				
27	1	61170124	Lower flange				
28	1	61110074R	Guard				
29	1	61370298	Bevel gear set				
30	1	3891036R	Screw				
31	1	61370559	Bevel gear				
32	1	3891050R	Screw				
33	1	3933105	Nut				
34	1	61370134R	Band				
35	1	3914003R	Nut				
36	1	3801015R	Screw				

KEES VAN DER SPEK
TUINMACHINES ★ STOLWIJK

Copyright EMAK S.P.A.

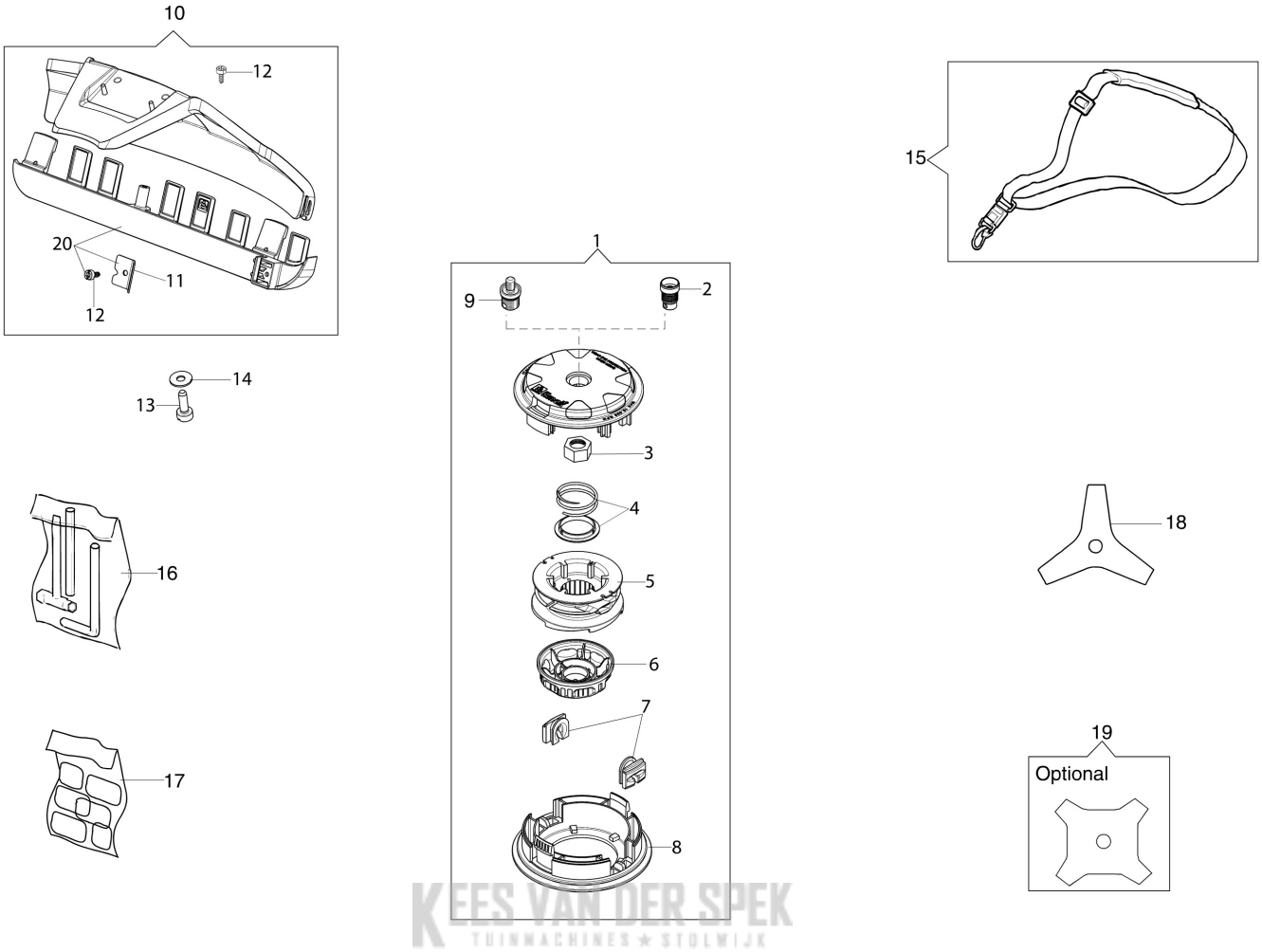

KEES VAN DER SPEK
TUINMACHINES ★ STOLWIJK

Copyright EMAK S.P.A.

Ref.Nu	Qty	Part number	Description	Validity from	Validity till	Notes	Bulletin
1	1	63129007	Load & Go nylon head				
2	1	63120041R	Insert				
3	1	63120040R	Nut				
4	1	63120031R	Kit spring				
5	1	63120020AR	Nylon spool				
6	1	63120007AR	Knob				
7	2	63120001R	Bushing				
8	1	63120005R	Cover				
9	1	63120042R	Insert				
10	1	61370264	Disc guard			Rosso; Red	
11	1	61370161AR	Blade				
12	2	3893016AR	Screw				
13	2	3891038R	Screw				
14	2	094600054	Washer				
15	1	4160463AR	Single harness				
16	1	61370214R	Tool kit				
17	1	61370293	Labels kit				
18	1	4095673BR	3-tooth blade				
19	1	4095681AR	4-tooth blade			Optional	
20	1	61372033R	Skirt w/blade				

KEES VAN DER SPEK
TUINMACHINES ★ STOLWIJK

Copyright EMAK S.P.A.

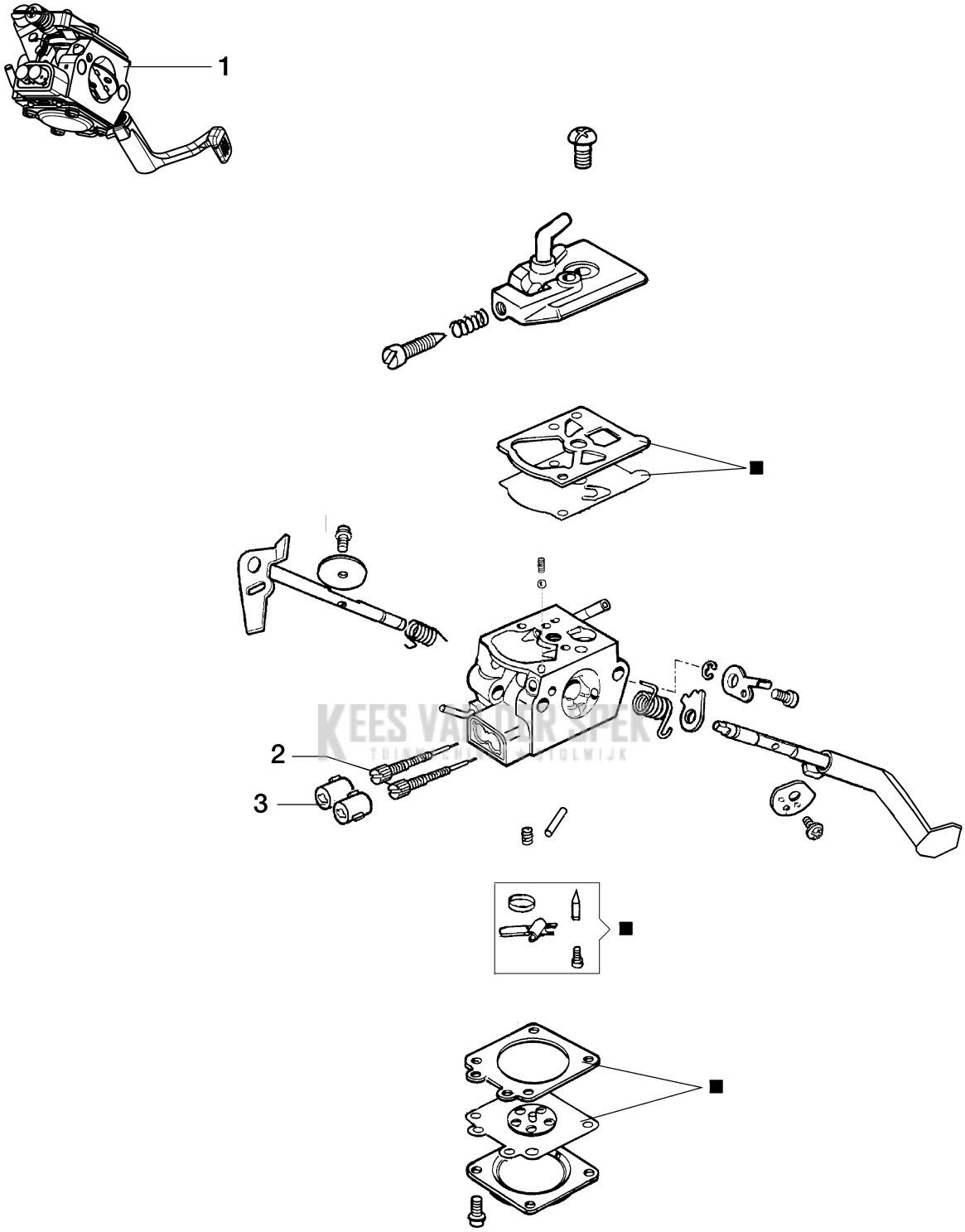

■ 4 — KIT RIPARAZIONE
REPAIR KIT

Copyright EMAK S.P.A.

Ref.Nu	Qty	Part number	Description	Validity from	Validity till	Notes	Bulletin
1	1	2318265R	Carburetor				
2	2	2318837	Adjust. screw				
3	2	2318867R	Caps-lock				
4	1	2318671	Repair kit				

KEES VAN DER SPEK
TUINMACHINES ★ STOLWIJK

Copyright EMAK S.P.A.